GUILD ◆ EDITION

Woodsmith®

Woodsmith.com

Vol. 40 / No. 237

RUSTIC BARN-DOOR CABINET

No-Nonsense Drawer Joinery

The Best Bits for Your Palm Router

Keeping Tabs on Your Tools & Supplies

+ **Must-Have** Workbench Accessories

Woodsmith®

EDITOR Vincent Ancona
MULTIMEDIA EDITOR Phil Huber
ASSOCIATE EDITOR Robert Kemp
ASSISTANT EDITORS Erich Lage, Logan Wittmer
CONTRIBUTING WRITERS Bryan Nelson, Randall A. Maxey

EXECUTIVE ART DIRECTOR Todd Lambirth
SENIOR ILLUSTRATORS Harlan V. Clark, Dirk Ver Steeg, Peter J. Larson
SENIOR GRAPHIC DESIGNER Bob Zimmerman
GRAPHIC DESIGNER Becky Kralicek

CREATIVE DIRECTOR Chris Fitch
PROJECT DESIGNERS Dennis Volz, Dillon Baker
PROJECT DESIGNER/BUILDER John Doyle
CAD SPECIALIST Steve Johnson
SHOP CRAFTSMAN Dana Myers

SENIOR PHOTOGRAPHER Crayola England
ASSOCIATE STYLE DIRECTOR Rebecca Cunningham
SENIOR ELECTRONIC IMAGE SPECIALIST Allan Ruhnke
PRODUCTION ASSISTANT Minniette Johnson

FOUNDING EDITOR Donald B. Peschke
MANAGING DIRECTOR CLIENT SOLUTIONS Dean Horowitz
PUBLISHER Steven M. Nordmeyer
VICE PRESIDENT GENERAL MANAGER Peter H. Miller, Hon. AIA

Woodsmith® (ISSN 0164-4114) is published bimonthly by Cruz Bay Publishing, Inc., 2143 Grand Ave, Des Moines, IA 50312.
Woodsmith® is a registered trademark of Cruz Bay Publishing.
Copyright© 2018 Cruz Bay Publishing, Inc. All rights reserved.
Subscriptions: Single copy: $6.95.
Canadian Subscriptions: Canada Post Agreement No. 40038201. Send change of address information to PO Box 881, Station Main, Markham, ON L3P 8M6. Canada BN 82564 2911
Periodicals Postage Paid at Des Moines, IA, and at additional offices.
Printed in U.S.A.

WoodsmithCustomerService.com

ONLINE SUBSCRIBER SERVICES

- **VIEW** your account information
- **RENEW** your subscription
- **CHECK** on a subscription payment
- **PAY** your bill
- **CHANGE** your mailing or e-mail address
- **VIEW/RENEW** your gift subscriptions
- **TELL US** if you've missed an issue

CUSTOMER SERVICE Phone: 800-333-5075 weekdays

SUBSCRIPTIONS
Customer Service
P.O. Box 842
Des Moines, IA 50304-9961
subscriptions@augusthome.com

EDITORIAL
Woodsmith Magazine
2143 Grand Avenue
Des Moines, IA 50312
woodsmith@woodsmith.com

ACTIVE INTEREST MEDIA

PRESIDENT & CEO **Andrew W. Clurman**
SENIOR VICE PRESIDENT, TREASURER & CFO **Michael Henry**
CHIEF INNOVATION OFFICER **Jonathan Dorn**
VICE PRESIDENT, AUDIENCE DEVELOPMENT **Tom Masterson**
VICE PRESIDENT, PEOPLE & PLACES **JoAnn Thomas**
AIM BOARD CHAIR **Efrem Zimbalist III**

from the editor

Sawdust

If you watch any home improvement shows, you probably already know how popular barn-style doors have become in interior design. They're showing up everywhere, from closets to dining rooms and even office buildings. Of course, not everyone has the space for adding such a large feature to a room. So we decided to create a project that included a scaled-down version of barn doors. Coming up with a design for the project was the easy part. Finding the hardware proved to be the real challenge. There were actually two issues at hand here. First, most of the commercially available hardware is designed for large doors. And second, it tends to be pretty expensive.

Instead of using commercial hardware, John Doyle, one of our project designers, spent some time in the shop experimenting with a method for making your own barn-door hardware out of nothing more than steel bar stock, some pulleys, and a handful of fasteners. As you can see in the photos on the cover and at the bottom of the next page, the results look fantastic. And after spending quite a bit of time playing with the doors by sliding them back and forth (while no one was watching), I can tell you that they work as good as they look.

Naturally, a cabinet with barn doors deserves a suitable finish to match. In this case, we went with a distressed, rustic-looking finish that was achieved through a combination of milk paint and glaze. Creating the look you see is a multi-step process, but the results are definitely worth the effort.

You can read about the finishing technique and making the hardware in the article on page 44. But to give you an even better look at these two aspects of this project, we've created a couple of Online Extra videos that you can view on our website at *Woodsmith.com*. Sometimes it helps to actually be able to see someone doing something rather than just reading about it.

As a side note, both of these videos are taken from the *Woodsmith Video Edition*. They'll give you a taste of the kinds of videos you can see each week as a subscriber to the *Woodsmith Video Edition*. You can find out more about it at *WoodsmithVideoEdition.com*.

Vince

Follow us:

WoodsmithMagazine
@WoodsmithMagazine
@WoodsmithMag

contents

No. 237 June/July 2018

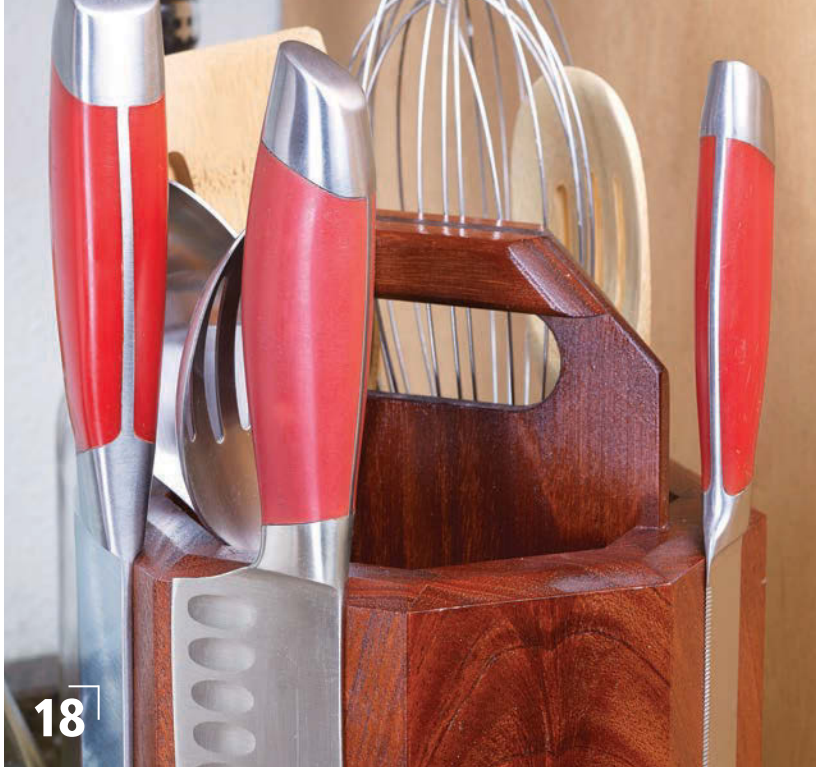

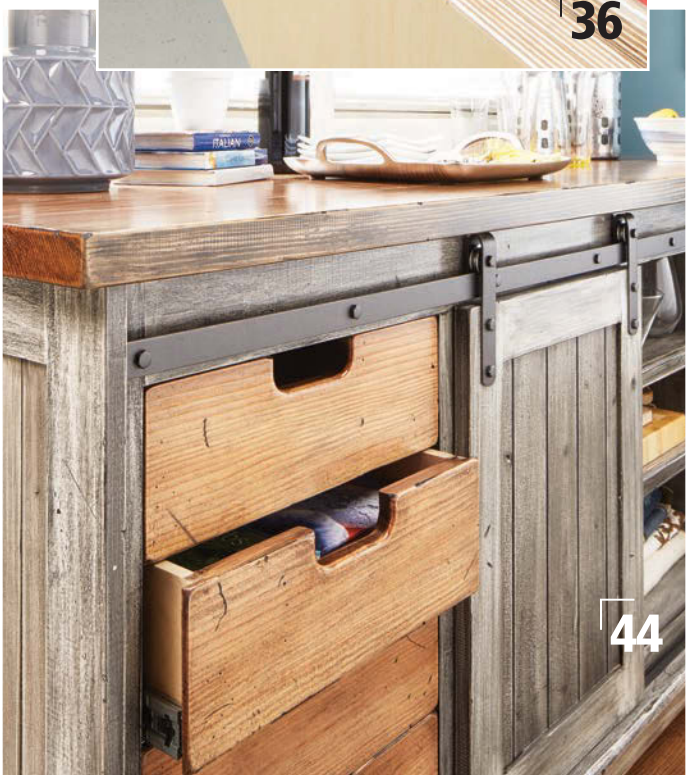

Projects

weekend project

Magnetic Knife Block 18

Unlike a conventional knife block, this weekend project stores the knives on the outside — where you can easily see them. It uses concealed rare-earth magnets to hold the knives in place.

shop project

Auxiliary Router Bases 24

This trio of shop-built auxiliary router bases will expand the capabilities of your hand-held router. You can build one or all three, depending on the type of work you do.

designer project

Floating Wall Shelves 30

Without any visible wall fasteners, these shelves seem to be magically suspended from the wall. The design allows you to customize the layout to suit your wall space for a unique look.

shop project

Multifunction Clamping Station. 36

Whether you need to assemble a project or just hold a piece firmly in place while working on it, this mobile clamping station fills the bill. It's a must-have for any shop.

heirloom project

Barn-Door Cabinet 44

The rolling barn doors and distressed, rustic finish give this project a country feel. But the ample storage space will be a welcome addition to any home.

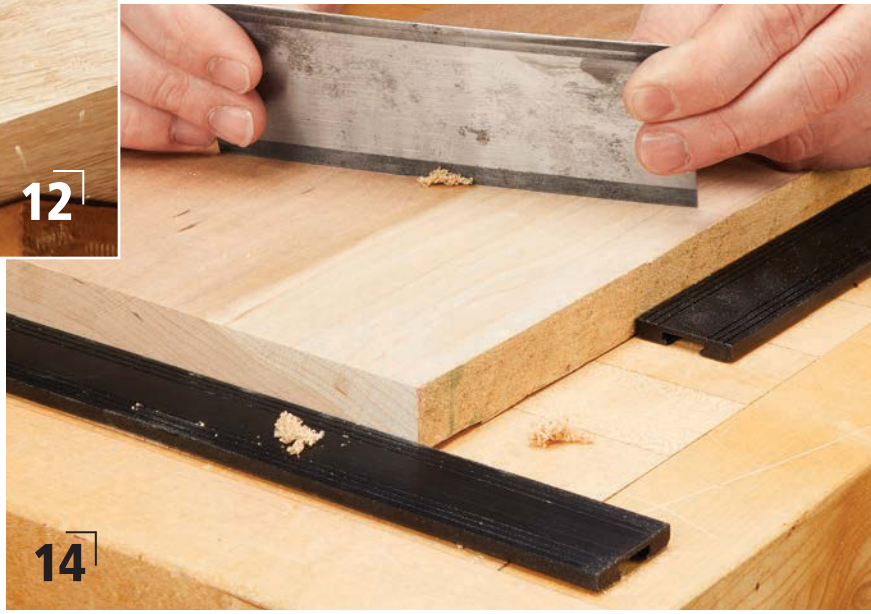

Departments

from our readers
Tips & Techniques 5

all about
Aniline Dyes. 10

router workshop
Best Bits for Palm Routers 12

great gear
Dog Hole Accessories 14

woodworking technique
Working with Acrylic 16

working with tools
Choosing a Band Saw 56

in the shop
Shop Inventory 60

mastering the table saw
Locking Rabbet Joinery 62

tips from our shop
Shop Notes. 64

from our readers

Tips & Techniques

Dust-Proof Charging Station

One day, while blowing the sawdust off my cordless tool chargers, I decided I needed to come up with a charging station that would organize the chargers as well as keep the dust off of them. My solution is a simple box that mounts to the underside of any shelf or cabinet. The back of the case is hinged to allow the box to drop down (photo at right).

HANGING BOX. The charging station parts are joined together with a series of rabbets. A continuous hinge connects the back to the bottom and the back closes into rabbets on the sides. The back of the case is fastened to the underside of a cabinet with pocket screws. A hook and eye latch holds the charging station closed (inset photo). A small chain attached to the inside of the station and the cabinet supports the station when it's opened.

Ron Diermeier
Neenah, Wisconsin

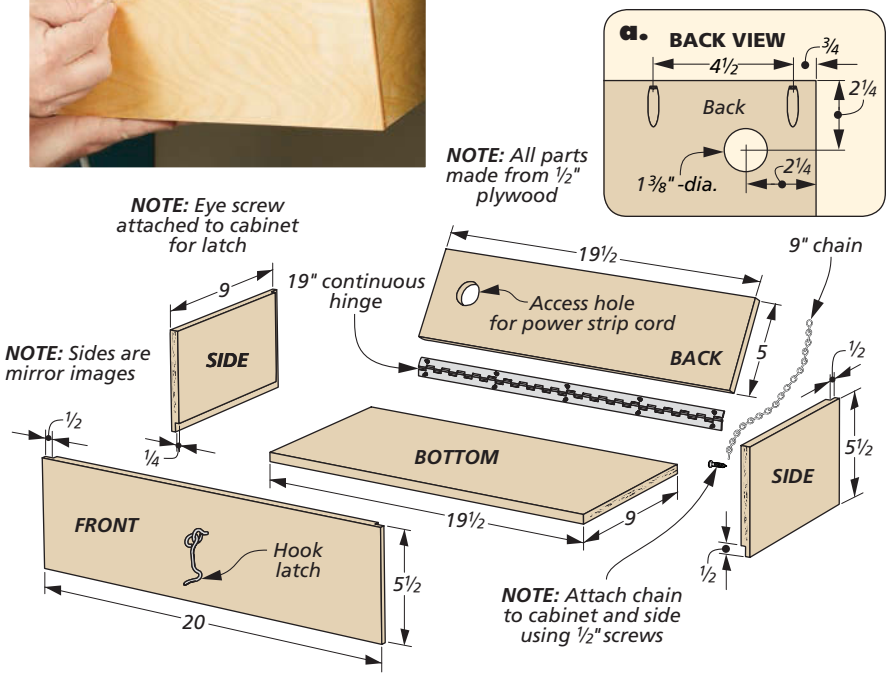

Win This Forrest Blade

Simply send us your favorite shop tips. If your tip or technique is selected as the featured reader's tip, you'll win a *Forrest Woodworker II* blade. To submit your tip or technique, go to *SubmitWoodsmithTips.com*. There you can upload your tips and photos for consideration.

The Winner!

Congratulations to Ron Diermeier, the winner of this *Forrest Woodworker II*. To find out how you can win this blade, check out the information at left.

Illustrator: Becky Kralicek

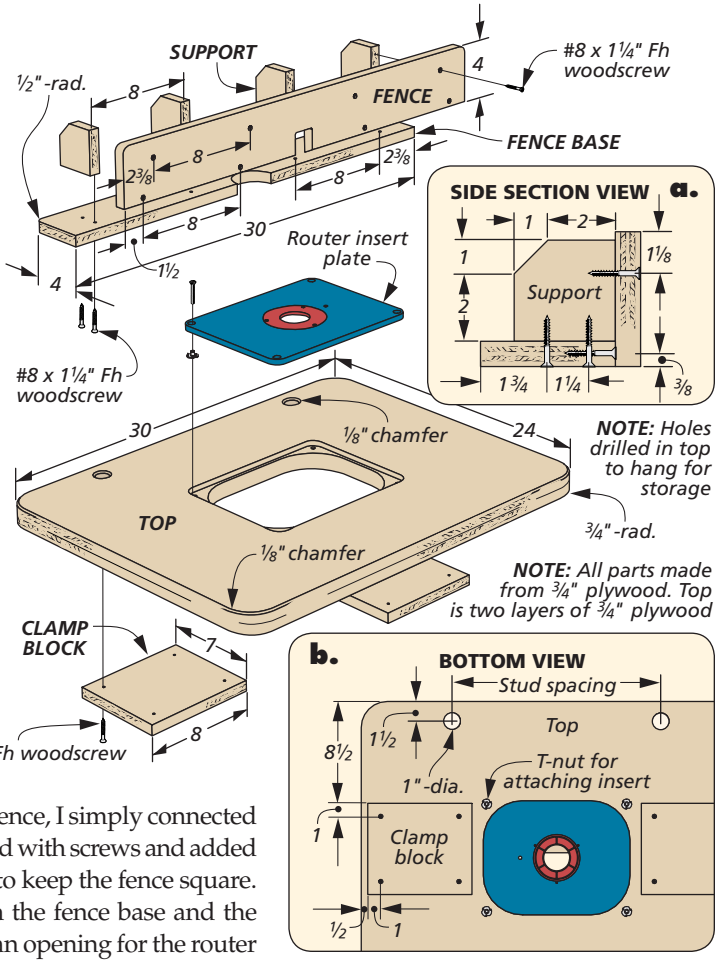

Fold-Away Router Table

In my shop, floor space is always at a premium. One day, I had the idea to build a router top for my *Workmate* to help save on real estate.

TOP CONSTRUCTION. I built the top of the router table using two layers of ¾" plywood. This ensured that the top was sturdy and it wouldn't warp over time. Instead of attaching the router to the top, I chose to cut an opening for a router insert plate. This allows me to remove the router and plate for storage.

To make the fence, I simply connected strips of plywood with screws and added some supports to keep the fence square. A notch in both the fence base and the fence provides an opening for the router bit. A clamp on each end holds the fence to the table (main photo).

FOLDABLE BASE. To grip the top in the *Workmate* base, I attached a pair of clamp blocks wider than my router on the underside of the top. When I'm done working with the router top, I pull the insert out and store it in the cabinet. The top can be hung on a wall using a pair of holes drilled to match stud spacing. The *Workmate* can then be folded for storage.

Adam Petersen
Sioux Falls, South Dakota

QUICK TIPS

Laminate Spacer. *Bill Ding* of *Birmingham, AL,* uses laminate chip samples to prevent vise racking. The samples, available for free from home improvement stores, are held together with a bolt and nut. Bill can then swing them out to the same thickness as his workpiece.

Check Misfires. *Rob Mahan of Chelsea, MI,* uses a simple trick for checking brad holes after his nailer misfires or runs out of brads. By holding a small magnet over the holes, Rob can confirm where nails have been driven and those locations where the nailer has misfired.

▲ Slots in the back allow the jig to be moved up and down for working on different thickness of materials.

Circular Router Guide

I make a lot of wood toys. This frequently requires routing profiles on small round parts. To safely work with these parts at the router table, I made the guide shown here.

This guide serves as a fence for the parts and helps keep my fingers away from the spinning bit. The polycarbonate guard offers a clear view of the bit.

V-NOTCH. The guide is made of plywood. The base has a V-notch cut in it which intersects an elongated hole. The V-notch and the hole provide clearance for the router bit. A pair of threaded knobs and economy T-nuts are mounted in slots on the back and attach the guide to the router fence. The polycarbonate guard is attached with two panhead screws.

To use the guide, the economy T-nuts are slid into the T-track in the fence and the knobs tightened down. The fence can then be adjusted to position the guide for the diameter of the workpiece that you'll be routing. The width of the V-notch can be customized for the diameter of workpieces that you usually work with.

Dan Martin
Galena, Ohio

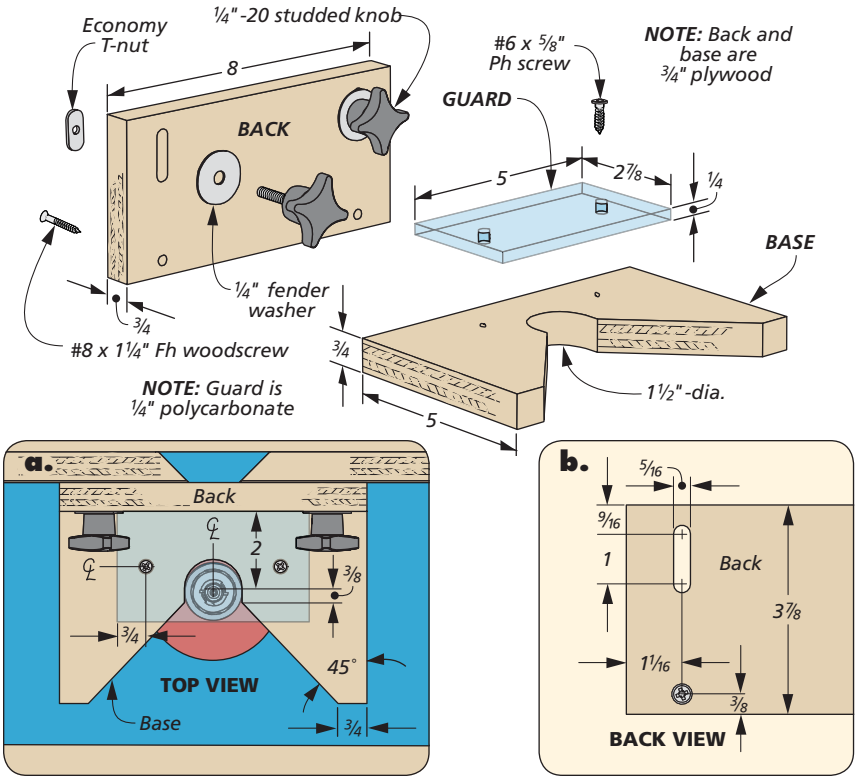

Illustrations: Becky Kralicek

DIGITAL WOODSMITH

SUBMIT TIPS ONLINE

If you have an original shop tip, we would like to hear from you and consider publishing your tip in one or more of our publications. Jump online and go to:

SubmitWoodsmithTips.com

You'll be able to tell us all about your tip and upload your photos and drawings. You can also mail your tips to "Woodsmith Tips" at the editorial address shown on page 2. We will pay up to $200 if we publish your tip.

RECEIVE FREE ETIPS BY EMAIL

Now you can have the best time-saving secrets, solutions, and techniques sent directly to your email inbox. Just go to:

Woodsmith.com
and click on,
"Woodsmith eTips"

You'll receive one of our favorite tips by email each and every week.

Band Clamp Corner Guards

When gluing up a drawer, I needed corner protectors that were larger than the ones that came with my band clamp. So, I decided to make my own. The solution ended up being a section of PVC pipe that was left over from a plumbing project.

After cutting the pipe into four pieces, I cut a 1"-wide slot along the length of each piece. The slot allows the PVC to fit over the corners of the project without damaging them. For clamping pressure, I used a standard band clamp.

The large diameter of the PVC allows me to stand the corner pieces on end and use both hands to center the strap. The slot in the PVC makes it easy to reach a tape measure to the corners of your project and measure for square (inset photo).

Wilbur Carruth
Eagle Lake, Florida

QUICK TIPS

Locating the Off Switch. *Jason Adler* of *Richland, WA*, found himself searching for the power switch on his table saw, particularly when cutting large workpieces. To help quickly find the switch, he marks its location with a piece of bright tape on top of his fence rail.

Sawdust Collection. *William Aulick* of *Cincinnati, OH*, makes his own wood filler using sawdust mixed with glue. To collect sawdust, William uses his lathe to turn a scrap of wood. With coarse grit sandpaper and a sheet of paper to catch the dust, WIlliam can quickly collect all he needs.

Painter Glue Points. *John Doyle* of *Ankeny, IA,* uses old glue bottle caps as painters points. By using the caps, he can easily lift his workpiece off the surface and avoids the edges sticking to the bench. The small surface area of the caps leave no marks and the wide base keeps them stable.

Makeshift Rasp. *Dennis Vertress* of *Elizabethtown, KY,* came up with an innovative solution when he needed a rasp but didn't have one that was long enough. With his workpiece clamped in a vise, he found a piece of all-thread served as a great makeshift rasp.

Drill Press Table Jack

My drill press doesn't have a crank to raise and lower the table. So moving the table on my drill press can be a pain. Not only is it heavy, but it's hard to get a good grip to both lift and lock it in place. I decided to tackle this problem by building the jack shown here.

JACK IT UP. The drill press table jack uses a mechanical advantage to allow me to easily raise or lower the table with one hand. I can simply move the arm to the closest set of notches, loosen the table, and lift (or lower). My other hand is free to lock the table in place. The arm can then be stored next to the table.

The jack consists of a wide base with two uprights. The uprights have a series of notches along the front edge. The long lift arm has a notch on the back end to fit over a dowel. Everything is attached to the bench so it doesn't tip over while in use. To make this sturdy, all the parts are glued up from two layers of plywood.

Dan Martin
Galena, Ohio

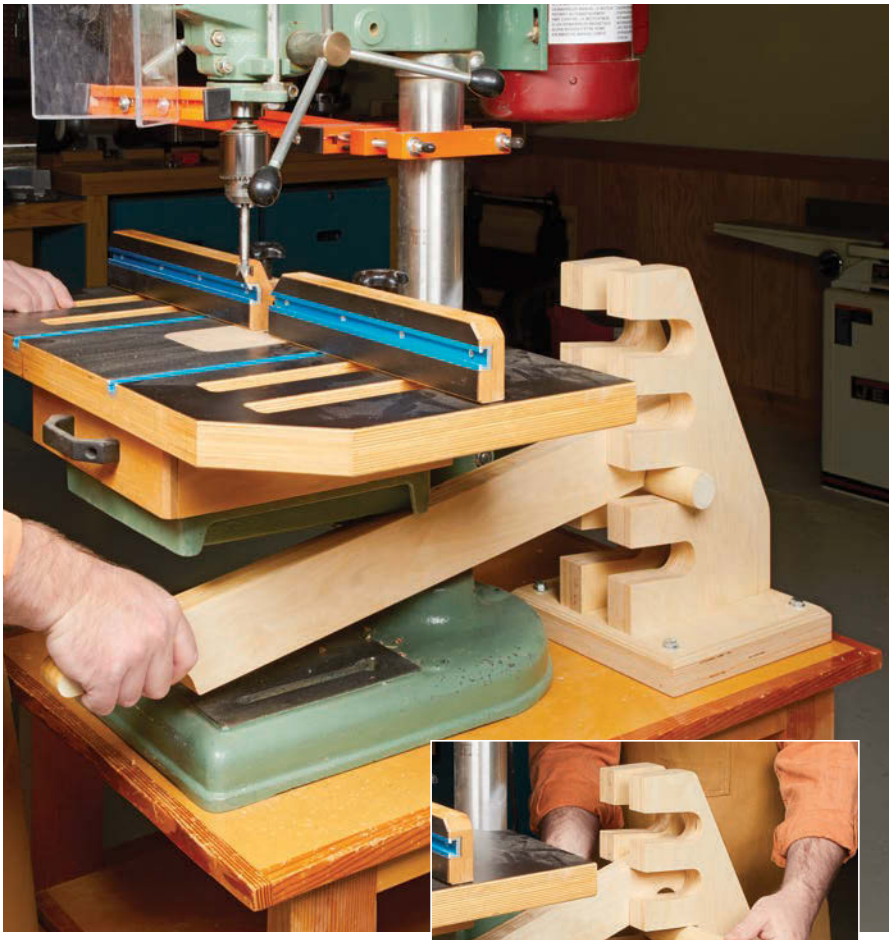

▲ By moving the dowel up or down in the uprights, the jack can cover a range of height adjustments.

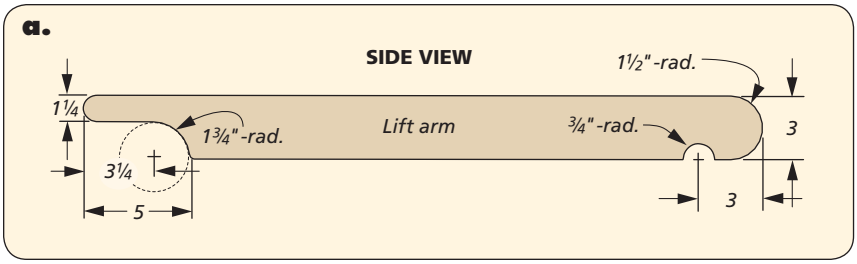

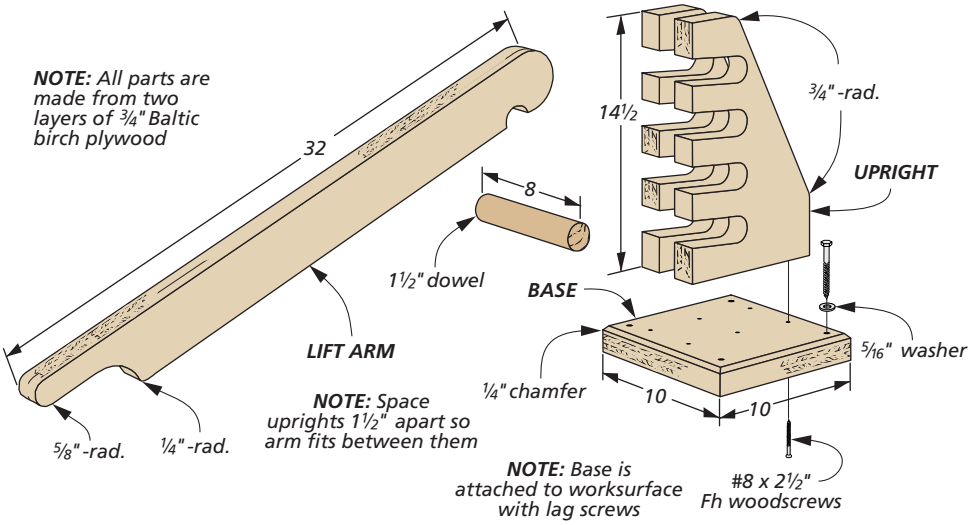

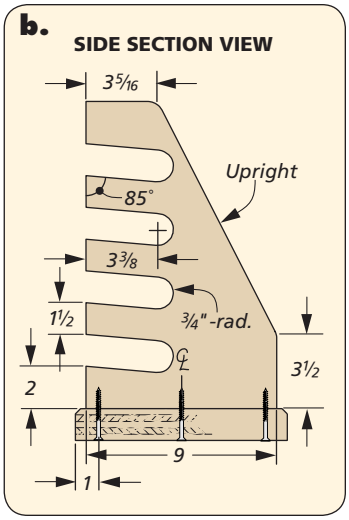

all about

Adding color with Aniline Dyes

As woodworkers, I believe each of us has an affinity for the natural beauty of wood. Sure, it's occasionally nice to have a project that you can breeze through because it's going to be painted. But for me at least, those tend to be few and far between. My go-to finish for years has been a wipe-on varnish that lets the wood shine. However, when I want to add a hint of color to a project without hiding the grain or figure with a stain, that's when I reach for an aniline dye.

COLORFUL & CLEAR. Before talking about the uses of dye, it's important to explain the difference between a dye and a stain. Almost everyone is familiar with a can of stain. These are nothing more than a pigment that's suspended in a binder. The binder acts like glue and holds the pigment primarily on top of the surface. A dye, however, is a ground natural pigment that is dissolved in a solvent. Since the pigment dissolves, the dye soaks deeper into the wood fibers. Because of this, dyes don't obscure the wood grain as a stain would. This soaking action also helps maintain even color on highly figured woods or species that don't take stain well, such as curly maple (middle photo, opposite page).

POWDER VS. LIQUID. Traditionally, dyes were available as a powder and dissolved in alcohol. Today, both liquid and powder dyes are available (bottom left photo). Both types can be dissolved

◄ Both powdered dye and liquid dye concentrates can be dissolved in water.

▲ Dyes are available in a variety of shades, ranging from wood tones to vibrant colors.

Written by: Logan Wittmer

Powdered dyes require straining after mixing into a solvent to remove any sediment that has not fully dissolved (photo, left). The transparency of dye allows the color to be built up gradually, or thinned out using additional solvent.

in water, denatured alcohol, or oil. Water is the most forgiving to apply, so it tends to be my first choice when mixing a dye, as shown in the main photo on the previous page.

Alcohol and oil can both be used to cut a dye into a finish such as lacquer or varnish. There are few differences between powder and liquid dyes, the main one being that powdered dyes need to be strained after initial mixing to remove any sediment (upper left photo).

COLORS. While stain manufacturers all have a standard palette of wood tones, dyes tend to be a little different. Dyes are available in various colors, ranging from reddish brown to yellow, purple, and beyond, as shown in the bottom right photo on the previous page. Can't find a shade you like? Try a custom mix adding different shades of pigment into a solvent.

MIXING DYE. Preparing dye does involve a little more work than opening a can of stain. When using a liquid dye, I start with a half cup of hot water and just a few drops of dye, but manufacturers will give you instructions for a good starting point for both powder and liquid dyes. With dye, you can always add additional layers to create a more vibrant color (upper right photo). So I keep my mixes on the lighter side and always write the mixture on the outside of the container.

APPLICATION. Application of dye depends on what solvent you use, as shown in the photos below. A water-based dye will raise the grain, so pre-dampen your workpiece and sand down any raised fibers. Then, you can either brush, wipe, or spray on the water-based dye. If brushing or wiping, keep a wet edge to avoid any lap marks.

Traditional stain (left) tends to blotch and obscure figured grain, while dye (right) highlights grain and stays uniform.

For dyes that are dissolved in alcohol, brushing tends to cause lap marks due to alcohols quick drying time. In this case, I like to mix the tinted alcohol with a finish such as shellac or lacquer. The dye and alcohol will thin the finish and tint it with your dye color. Then, I apply the finish as usual, which is normally by spraying.

With any method of dye application, it's imperative to allow ample drying time before applying a final topcoat. Because dye is not as lightfast as a stain, I prefer to topcoat with a UV inhibitor finish.

Whether you have some figured wood you want to show off, or you're looking for a little more control than a stain can offer, the versatility of dye can't be beat. W

Dye can be applied using many traditional methods. For water-based dye, brushing and wiping work well. For dye dissolved in alcohol, mixing the dye into a finish such as shellac or lacquer and spraying is the preferred method of application.

Best bits for Palm Routers

For years, my only router was a mid-size *Porter-Cable 690*. It's a solid, powerful tool. Since it came with a ½" collet, most of the bits I bought have ½" shanks. However, I've since added a smaller palm router and have been surprised at how powerful and capable it is. This machine only accepts ¼" shank bits, so I needed to add some bits to my kit (never a bad thing). Here are the bits I use most often.

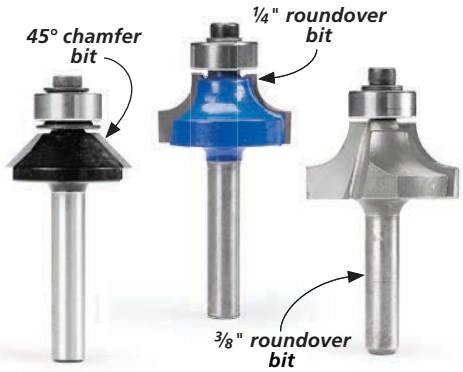

▲ Simple, small profile bits are just the starting point of assembling a set of bits for versatile palm routers.

EASED EDGES

The first job many folk think of with small routers is easing edges — the role even smaller "laminate trimmers" play. The trio to the left is a good place to start when talking about a set of bits.

CHAMFER BIT. A routed chamfer creates a facet that catches light (and your eye) in addition to softening the edge. A 45° chamfer bit is essential. But what you may not realize is that they come in several sizes. For this kind of work, opt for a smaller bit since the chamfers you'll be creating tend to be small. There's no point in paying for long cutting edges that you won't use.

ROUNDOVER BIT. Roundovers are the other easing profile you'll often turn to. Keep in mind that for softening edges, smaller radii are better. Start with a ¼" and ⅜" bit. The nice thing is these can be formed in a single pass.

You don't need to go crazy and get a lot of different-sized roundover bits. If you need a specific size down the road, you can pick it up at that time.

Another reason to keep the bit sizes small is the relatively small footprint of a palm router. Using smaller bits means the router is more stable and better balanced on a workpiece.

SHAPING KIT

Routers excel at creating shaped details and profiles. So with a palm router,

Written by: Phil Huber

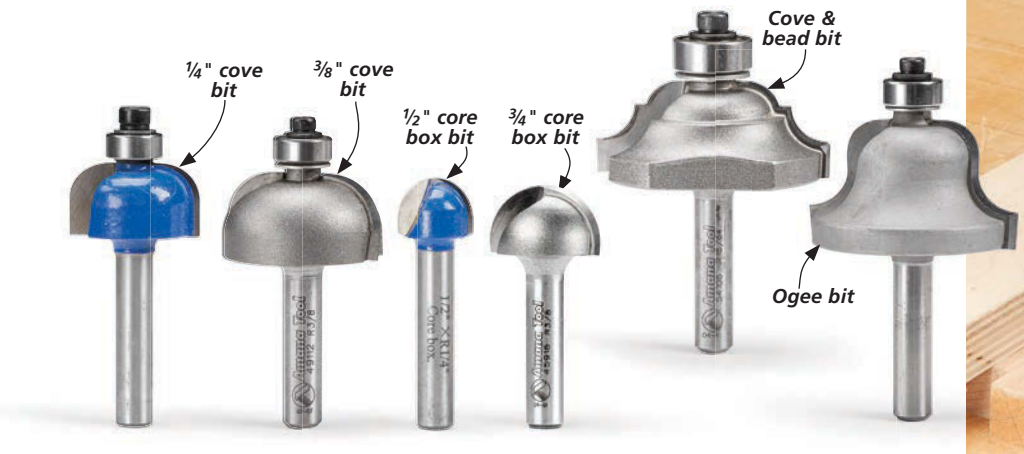

▲ Cove bits team up with chamfers and roundovers to create custom molding profiles. Core box bits form elegant flutes (photo at right). Find a dedicated profile bit (or two) that you like to create the profiles you use most often.

it pays to work to those strengths. Paired with the previous set of bits, the general-purpose bits shown above allow you to create a wide range of profiles.

COVE BITS. The starting point is getting a pair of cove bits. These bits create the opposite profile as a roundover bit. When used on its own, a cove routed on the underside of a tabletop visually lightens the look. However, a cove plays nicely with roundover bits to create complex, or built-up profiles.

CORE BOX BITS. Core box bits may seem too similar to cove bits to be worth purchasing. But having a couple of these bits frees you from only routing the edges of a workpiece. You can create flutes, as shown in the upper right photo, or other rounded details.

SPECIALTY PROFILE. I also suggest adding a specialty profile bit to your mix. These can be used on small projects, or in combination with the other profiles, as a built-up profile. Here again, be mindful of the cutting diameter, which makes it trickier to support the router. Larger bits can cause the motor to bog down unless you make several passes.

JOINERY POWERHOUSE

I bought my first router thinking it would be a profile-making machine. The reality is I use the router for cutting joinery at least as often. The bits shown below are an array of mostly straight-cutting bits. The bits I'm listing are shown in standard sizes, but you may want to get a set of "plywood" sized bits if you work with that material often.

SPIRAL BIT. Many palm routers come as a kit that includes a plunge base. Paired with a ¼" spiral bit, a palm router cuts smooth mortises much faster than the drill-and-chop method.

A smattering of other inexpensive straight bit sizes (⅜" and ¾" to start) allow you to tackle grooves, dadoes, and rabbets (with your stock edge guide).

PATTERN BIT. Instead of a standard ½" straight bit, I chose a pattern bit. This "two-fer" solution works as a standard straight bit, but can also follow a template to create identical parts.

DOVETAIL BIT. The final bit is a dovetail bit. It may seem odd, but a palm router is beefy enough to power a dovetail bit using a jig (lower left photo). As a bonus, the smaller base gives you much better vision over the process to boot.

In some cases, I ended up buying bits I already had in ½" shank. But considering the palm router's ease of use, it was worth the extra expense. W

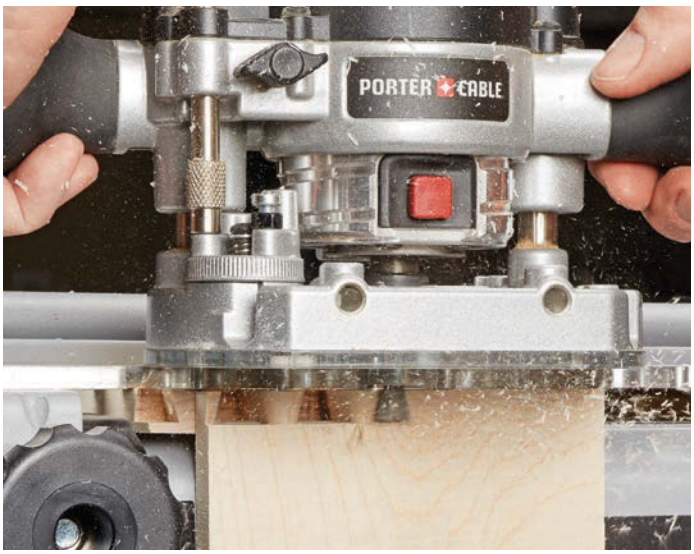

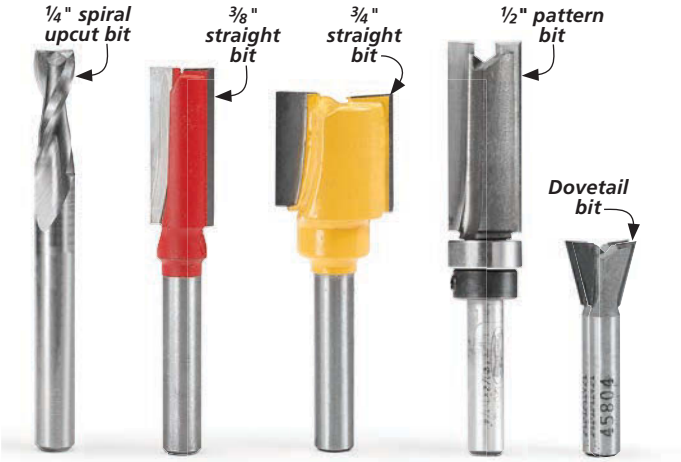

▲ Straight bits allow you to tackle all kinds of joinery with a palm router. A pattern bit serves double duty for using templates. Don't forget a dovetail bit if you have a dovetail jig.

great gear

Beyond Bench Dogs

Woodworking often requires a focused effort of controlled strength in a small area — with sharp tools. And it goes without saying that these tasks need to be done accurately and safely. So here's a quick look at some of the allies you have at the workbench when you're trying to accomplish that.

The common trait among the tools I'm looking at here is that they all fit in a ¾" dog hole. There are four devices I took a look at and each has its own merits and works in a slightly different way.

HOLD-DOWNS. The first option to consider is an adjustable clamping setup like you see in the photo below. The hold-downs are a combination of a *Kreg* bench clamp, attached to a clamp plate and post. This combo is available from *Lee Valley* and has a lot going for it.

The long post that the clamp is attached to has fine ridges that give it a non-slip grip, as you see in the photo at right. The length of the post lets you raise the clamp to accommodate different thicknesses of workpieces.

The *Kreg* clamp has an auto-adjust mechanism that lets you dial in your clamping pressure. After you've set the pressure the first time, it will maintain that pressure regardless of how thick your workpiece is.

The only downside with this tool is that the tongue of the clamp that's pressing the board against the table can be in

Don't Move. The clamp and post combo lets you lock your workpiece where you want it on your workbench.

Written by: Erich Lage

the way at times. So next up are a few devices that hold things from the edges.

BENCH BLADES. There are times when you find yourself needing unobstructed access to the surface of a workpiece. But you still want it held firmly in place, such as when doing relief carving like you see in the far right photo. The *Veritas Bench Blade* is the accessory for this situation. This sleek, low-profile clamp shines when it comes to staying out of your way and keeping delicate workpieces in place.

To start, it sits barely ¼" above the surface of the workbench. The jaw of the clamp rotates and has a 5° cant that pinches firmly against the workpiece (left photo above). The jaw is moved into place by a cam that has two positive stops and a throw range up to a ¼". So using a pair of the blades gives you plenty of room for adjustment.

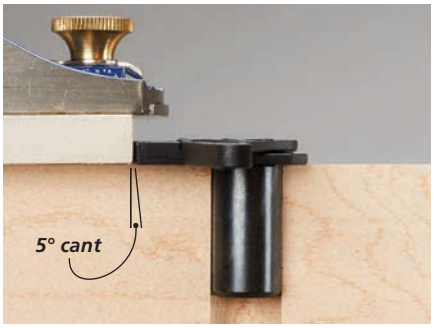

Low Profile. The inward cant in the face of the *Bench Blade* from *Veritas* holds thin material firmly in place.

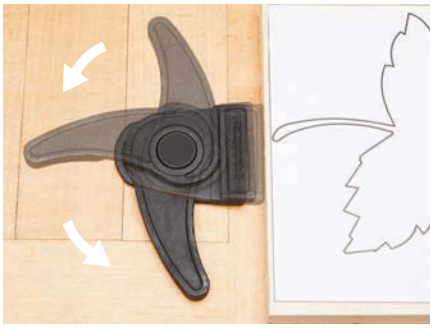

Firm Grip. The adjustable cam and pivoting head on each *Bench Blade* provide flexible clamping options.

Plane Stops. This simple bar and pegs fit the bill in many tasks at the workbench. They're ideal for planing or scraping boards.

PLANE STOPS. Often, I don't need a workpiece clamped; I just don't want it sliding around when I'm working on it. An example is when I'm planing or scraping a board, like in the photo at left.

The plane stops from *Veritas* are a low-profile option to keep workpieces from sliding, with the added benefit of being very adjustable. The setup starts with ¾" pegs that have an O-ring in a machined notch at the top of the peg. That notch travels in a groove on the underside of the long aluminum bar.

In the past, when I've made jigs that incorporate the dog holes in my workbench the dowels I used had to be spaced perfectly to those holes. With the plane stops, the distance between dog holes is of no consequence since they move freely in the bar.

Moving the bar itself while the pegs are held in place has an advantage when working on different sized pieces.

One more thing I want to show you is what's in the box below. *Bench Cookies* have been around for a while, but there's an upgrade worth looking at. There's no doubt that all of these accessories will serve you well at the workbench. W

▲ The pegs for the plane stop slide in a groove on the bottom face of the bar.

Bench Cookies: WORKING ABOVE THE FRAY

Above it All. The bench cookies with the XL risers provide enough clearance from the bench for jig saw operations.

Now for a product that takes you above and beyond the dog hole, but is anchored by it — *Rockler's Bench Cookie Plus*. The bench cookie is a round disc with a very aggressive gripper pad on either side. Setting your workpiece on these cookies prevents the board from moving around while you're working on it.

Rockler has upped the ante by adding a threaded insert on one side of the cookie that lets you attach risers to the cookie. These risers are ¾" diameter and come in two heights, standard and XL. The photo to the left shows one variation of how the XL riser can be attached to a cookie.

I used the XL riser to increase the distance of the workpiece from the worksurface, as the left photo shows. With the standard riser, you can lock a cookie in place in the dog holes. Or, you can tie two cookies together. The *Bench Cookie Plus Master Kit* is available from *Rockler*, (56071) for $59.99.

7 Tips for working with Acrylic

When I build jigs and fixtures, I often make them out of the same materials I use on my project — hardwoods and plywood. But for the router baseplates on page 24, we decided to use acrylic for the main parts. Acrylic makes it easier to see the work as you're routing. And since it's not affected by humidity, I know it will stay flat and hold up over time.

What's nice is you can use your basic woodworking tools to cut and shape acrylic. The following tips and tricks will help you get the best results as you work.

▲ Layout is made easy by leaving the protective wrap in place (left). A spring-loaded punch ensures an accurate hole location for drilling (right).

[1] Layout

One of the key challenges when working with acrylic is making accurate layout marks on the smooth, clear surface. The solution is simple — hold off on removing the protective wrap material from those surfaces (far left photo).

By leaving it in place, it's easy to make accurate layout marks, whether the wrap is paper or plastic. And while I complete all my machining tasks, it protects the surfaces from the inevitable scratches and marks that often result as you work.

[2] Punch It

The layout marks on the protective wrap work great when you're cutting to a line. But when it comes to drilling acrylic, I like to make sure the bit is going to enter right at the mark. Small diameter bits have a tendency to skate on the smooth surface, resulting in a slightly off-center hole.

So once I've made my layout marks, I use a spring-loaded punch to create a small dimple (near left photo). Then, when I'm ready to drill the hole, the bit centers itself right where I want it to.

[3] Choosing Blades

As I mentioned, basic woodworking tools like your table saw or band saw work fine for cutting and shaping acrylic. The challenge is that acrylic can heat up

Written by: Bryan Nelson

and melt as it's cut, besides possibly chipping out along the edges.

Most table saws come with a carbide-tipped saw blade and that works well in most cases. But for the best results, choose a blade with a triple-chip grind and 80-teeth. For cuts at the band saw, I typically use a ¼"-wide blade. It has more teeth per inch for taking smaller "bites."

Regardless of the blade you use on either tool, keep the feed rate steady as you make the cut. This minimizes the chance for the acrylic to melt and create a gummy mess along the cut line.

▲ A carbide-tipped saw blade, hardboard backer, and a steady feed rate provide the smoothest cuts.

▲ To minimize melting and plastic build up on the bottom face, a backer is especially important at the band saw.

[4] Use a Backer

Whether you're making a cut at the table saw or band saw, one of the best things you can do is add a piece of hardboard under the workpiece (upper right photos). The hardboard acts as a backer to support thin material and helps prevent chipout along the cutline. I find it best to use double-sided tape to attach the hardboard right along the cut lines.

[5] Drilling & Tapping

Drilling holes is probably the most challenging task with acrylic. Most drill bits tend to dig into the material and grab, which often results in cracks and chipout.

There are specialized bits for drilling plastic. And if you have to drill a lot of holes, that's the best solution. But for just a few holes, you can take an ordinary twist bit and modify it by grinding small flats on the flutes (photo at lower left). This turns the bit into a scraper, so the plastic simply curls away from the bit as you drill the hole. (I drill at the lowest speed on my drill press.)

For the baseplates, I needed more than just through holes, though. As you can see in the center photo below, I tapped a few of the holes to accept fasteners. After drilling the appropriate size clearance hole, you're ready to create threads by running a tap through the hole.

[6] Keep It Lubed

When you work with metal, it's important to provide lubrication as you drill a hole or tap threads. That's just as true for acrylic. The nice thing is, however, you don't need to use messy cutting fluids or oils for the job.

I just mix up a solution of water and a little dishwashing soap. A few squirts from a bottle as you work keeps things cool and improves the overall result.

[7] Finishing Edges

No matter how careful you are, the odds are that some of the cut edges will show some saw marks. Files, sandpaper, and a scraper (photo below) are really all you need to create smooth edges.

But if you want to remove most of the work of smoothing an edge, you may want to try out a flush-trim bit mounted in a router table. To do this, I spend my time up front shaping a piece of hardboard to match the shape I want.

Then, I use that as a template to lay out the profile on a piece of acrylic. After cutting the acrylic slightly oversized (1/16" all around), I join them with double-sided tape and rout the edges flush (main photo, opposite page). The bit leaves a smooth, finished edge.

The next time you work with acrylic, give these tricks a try. I'm sure you'll find the end results are just what you need. W

▲ A modified twist bit (left) ensures the bit doesn't grab. It also creates tight, curly shavings as you drill the hole.

▲ Acrylic can be tapped just like metal. After drilling an undersized through hole to match the tap, cut the threads.

▲ To smooth out any rough edges or saw marks after making a cut, take a few passes with an ordinary card scraper.

Weekend Project

Revolving Knife Block

This knife block is not only a great way to show off your knives, but to store them also. The built-in handle makes it easy to move the block from counter to cabinet.

When I recently decided to replace my worn-out knife set, I bought a set of high-quality knives. The knives didn't come with a knife block, however. So I decided to build one.

DESIGN DETAILS. The first thing you'll notice about this knife block is its shape. Instead of a typical "square" knife block, this one is an octagon. The shape is accomplished with the help of a unique bit at the router table.

This knife block keeps all of your knives in one place, and it also shows them off. That's because of how the block holds the knives. Instead of slipping into slots, the knives are held to the block with the use of hidden magnets. A lazy Susan bearing allows the canister to spin for easy access to each knife, no matter where they are on the block.

After the canister is assembled, a figured veneer is added to cover the recessed magnets. A divider acts as a handle and also creates two storage areas for other kitchen tools. The best feature of the block, however? That may be its small size. And the fact that it's packed with woodworking techniques, but goes together in a weekend.

STAVES

The knife block consists of just a few parts. A series of staves form a canister that captures the bottom and the divider before the base is added. The first order of business is to cut the staves to size and cut the joinery to assemble the canister.

CANISTER PARTS. The staves get cut to size at the table saw. Then using a dado blade, cut a centered groove on two staves to accept the divider that's added later. The details of the groove are shown in Figure 1 on the next page. Figure 2 shows the location for the dado cut near the bottom of each stave.

Written by: Logan Wittmer; Project design: Dennis Volz

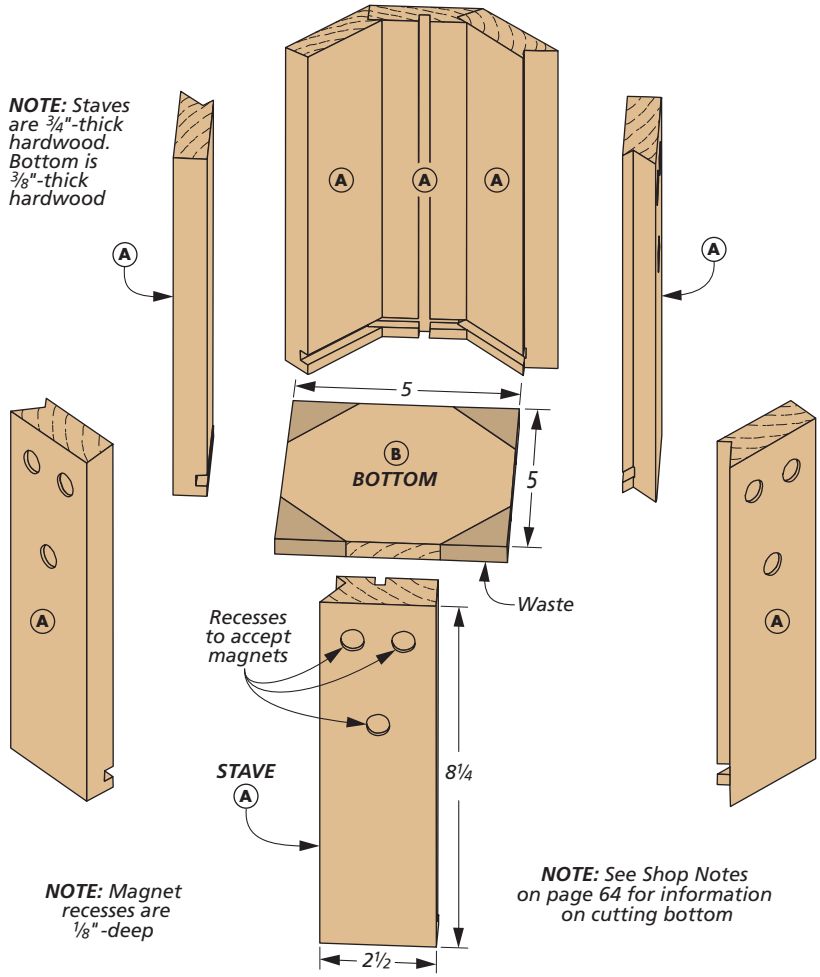

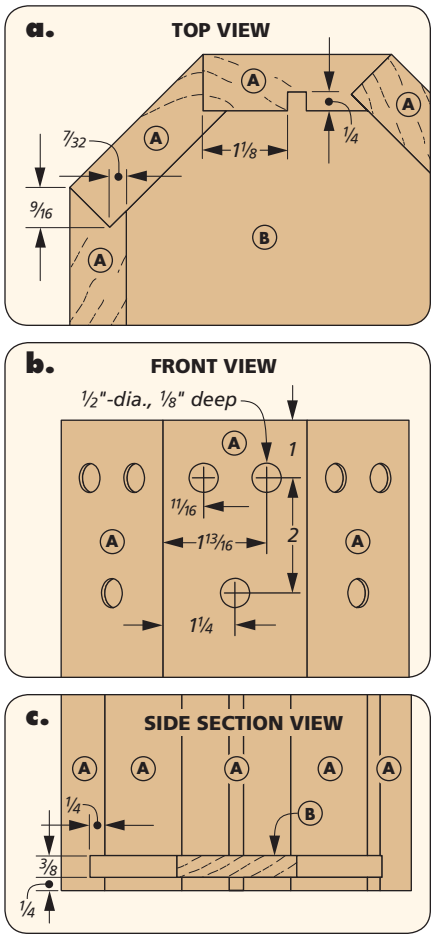

This dado holds the bottom. Before I cut the joinery to connect the staves, I drilled shallow holes on each outside face to accept the magnets. The dimensions can be found in detail 'b' above.

BIRD'S MOUTH. Instead of mitering the staves to create the canister, I used a bird's mouth router bit to cut a notch in one edge. Detail 'a' above shows how the staves fit together with this type of joint. The bird's mouth bit makes clamping the canister together simple. However, the setup for this type of bit is critical, so follow the manufacturer's setup instructions. Figure 3 below shows how to make this cut at the router table. Before moving on to assembling the canister, you'll want to make sure to cut the bottom to size. Details for both laying out and cutting the octagonal bottom can be found in Shop Notes on page 64.

How-To: CUT & SHAPE THE STAVES

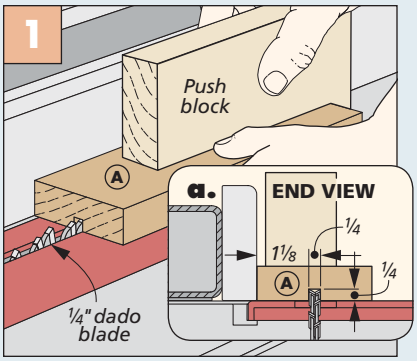

Grooves for Divider. At the table saw, cut a centered groove in two staves to hold the divider.

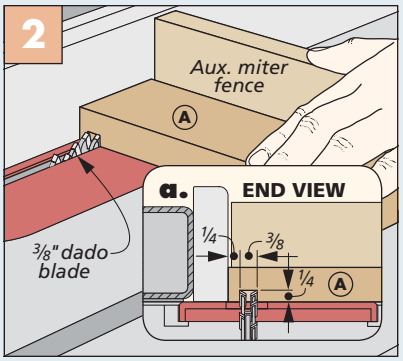

Dadoes for Bottom. Stay at the table saw to cut a dado on each stave to accept the bottom.

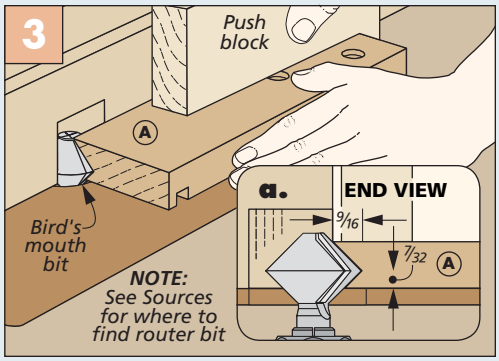

Rout Glue Joint. Use a bird's mouth bit to rout the glue joint on each stave. Set up the bit exactly per the manufacturer's directions.

Illustrations: Peter J. Larson

PATTERN ***CLAMPING FORM*** *(Enlarge 400%)*

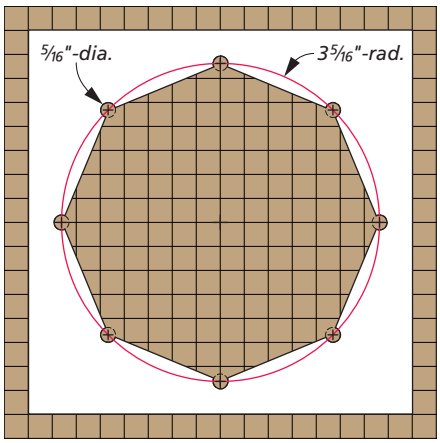

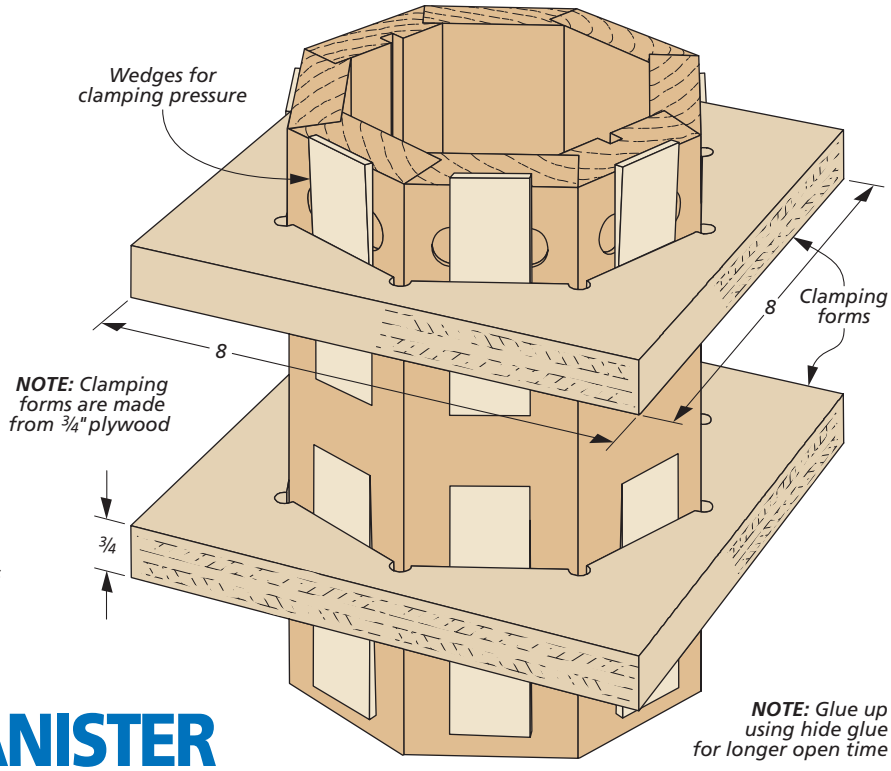

NOTE: *Clamping forms are made from 3/4" plywood*

NOTE: *Glue up using hide glue for longer open time*

Woodsmith GO ONLINE EXTRAS

For full-size pattern, go to Woodsmith.com

NOTE: *See Shop Notes on page 64 for clamping instructions*

Assemble the **CANISTER**

With the staves cut and the joinery complete, it's time to assemble the canister. With miters, clamping the canister together would be a long process, making sure nothing has slipped out of place. With the bird's mouth joint, each stave fits into a mating angled rabbet. This creates a positive reference when gluing the canister and makes assembly a snap.

CLAMPING FORM. Even though the bird's mouth joint makes assembling the canister easier, it can still be difficult to get even clamping pressure on each stave. The solution is the clamping forms that are shown above. Figures 1 and 2 below show the process for making the clamping forms. You'll need to make two of them, one for the top and bottom of the canister. Once the clamping forms are cut, check out Shop Notes on page 64 for the rest of the glue up details. Don't forget to put the bottom into the canister before gluing in all of the staves and seating the clamping forms.

CHAMFER. After the glue is dry, it's time to head back to the table saw to cut a chamfer around the top edge of the canister. The chamfer not only dresses up the finished block, but it also helps lessen the chance that the top of the block will get dinged with use. Cutting the bevel is as simple as tilting the blade 22.5° and supporting the canister with a miter gauge and a tall auxiliary fence (Figure 3). A stop block on the miter fence will ensure that each facet is consistent.

How-To: CREATE THE CLAMPING FORMS & CHAMFER THE TOP

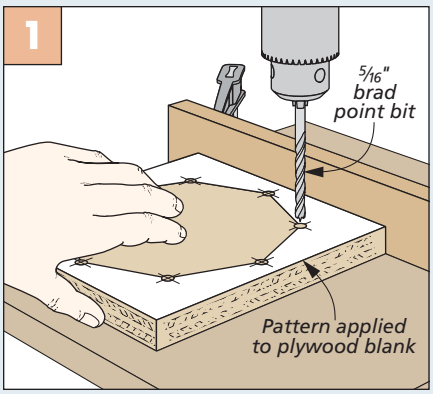

Drill Corners. Define the corner points of the clamping form with a drill bit to avoid damaging stave corners.

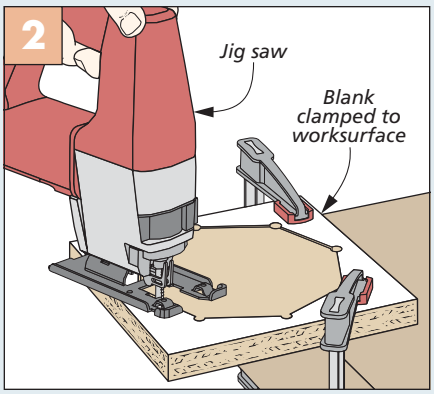

Form Opening. Use a jig saw to carefully remove the waste from the clamping form, keeping cuts straight.

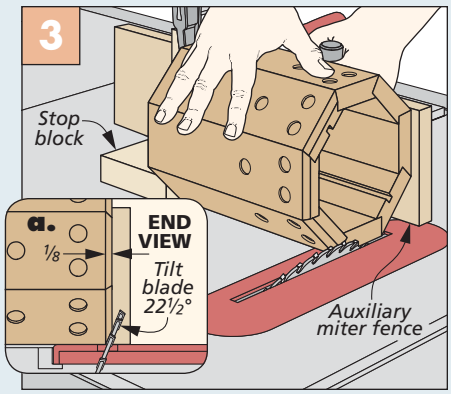

Chamfer Canister. Use a tall auxiliary miter fence to support the canister while chamfering the top edge.

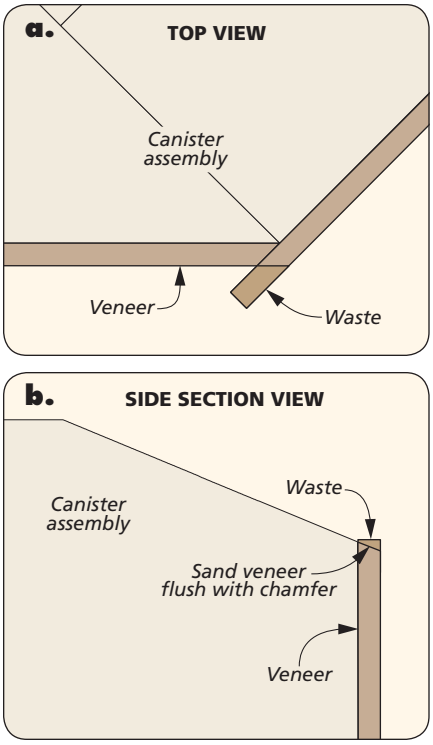

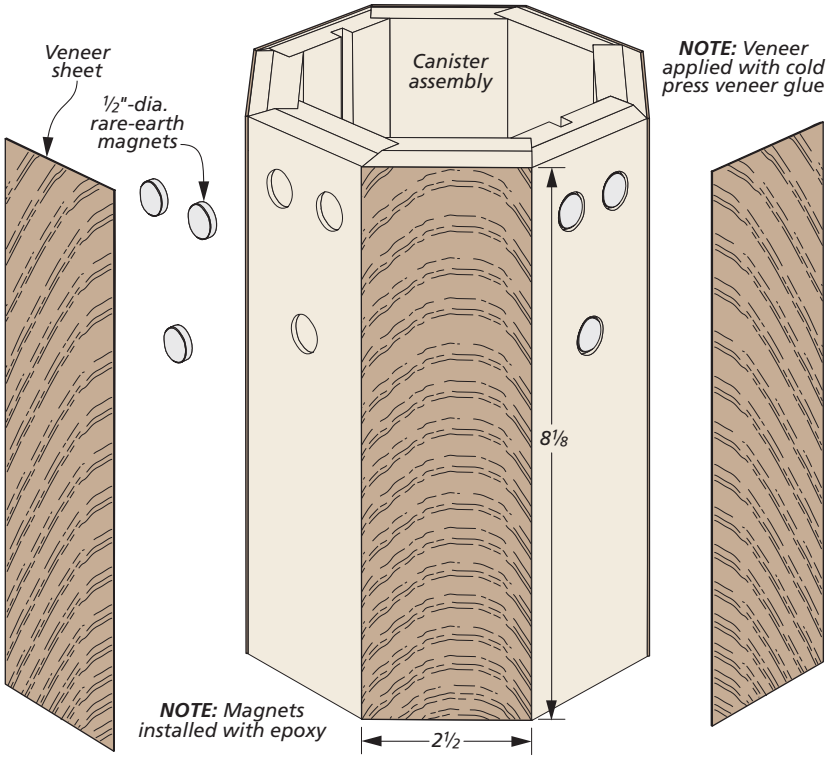

VENEERING THE CANISTER

Now that the canister is close to its final form, it's nearly time for the veneer. One final detail to take care of first is to install the magnets that will hold the knives to the block.

EPOXY MAGNETS. To hold the knives in place, I used three rare-earth magnets on each face. The sizing of these are important. If the magnets are too strong, the knives will be hard to remove. Too weak, and the knives won't hold to the block. In this case, ½"-diameter magnets that are ⅛"-thick worked well. Secure the magnets into each of the holes using epoxy and allow them to dry before adding the veneer.

VENEER. To cover the magnets, I used a mahogany veneer. The key to applying veneer is using an even spread of glue and even clamping pressure. Speaking of glue, I used a cold press veneer glue to prevent the adhesive from bleeding through the veneer. The How-To box below outlines the steps of applying and trimming the veneer.

Because of the angles of the staves, each face of veneer needs the edge planed to match the angle of the next stave. That way, when the next piece of veneer is applied, it will lay flat on top of the previous veneer face. Detail 'a' shows how the veneer overlaps. Sand the top edge of the veneer to match the chamfer on the top on the canister (detail 'b'). You're aiming for a smooth transition here.

How-To: APPLY VENEER TO STAVES

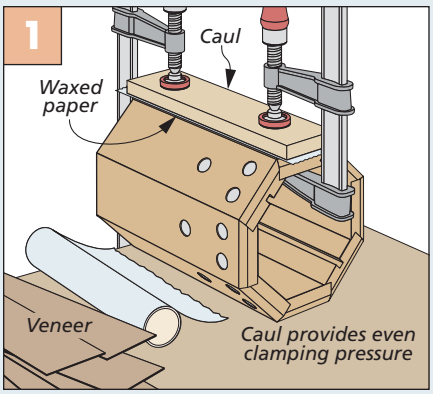

Glue Veneer. Apply the first panel of veneer using veneer glue and a caul to ensure even clamping pressure.

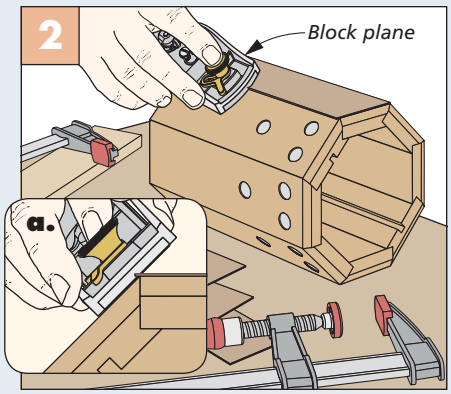

Bevel Veneer. Bevel the edge of each piece of veneer to match the next stave before applying the next veneer panel.

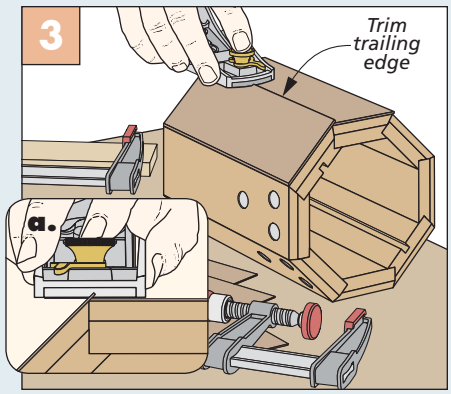

Trim Overlapped Veneer. Trim the overlapping veneer pieces with a block plane to soften the trailing edge.

Adding the DIVIDER & BASE

With the veneer attached to the canister and trimmed to size, you're in the home stretch. The last few things to add are a divider and base. As I mentioned before, the divider serves a couple of purposes. First, it offers a handle for carrying the block. Second, it breaks up the open space inside the canister so you can store long-handled kitchen tools.

DIVIDER FIRST. The divider is made of ¼"-thick mahogany. It has a hand hole cut near the top that's layered with a pair of scales to form a handle. The divider starts as a blank that's planed down to final thickness and cut to size on the table saw. Creating the hand hole is a straightforward process. Figure 1 below outlines cutting the opening in the divider.

A pair of scales are attached to both sides of the divider, flush with the top of the opening, to provide a comfortable grip. To create the scales, start with an oversized blank planed to final thickness and cut to width. Rout a ⅛" roundover on both long edges (detail 'b'). After the roundover is done, the scales can be cut to rough length and glued onto the divider blank above the handle opening. It's okay if they're a little long, as you'll trim them next.

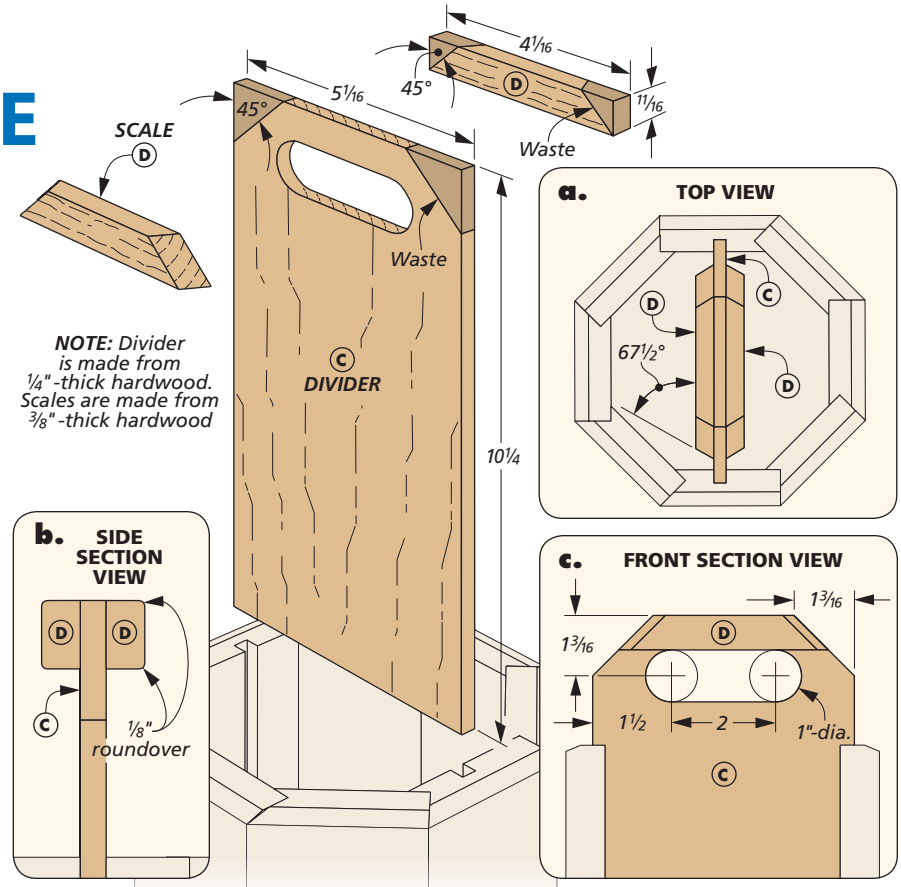

COMPOUND BEVELS. To lighten the look of the divider, the top corners are beveled, along with the ends of the scales. After the bevel is cut, the end of each scale is then chamfered at 22½° to achieve a compound angle that flows nicely. Looking at the angles, it can be easy to get confused on how to cut them. Not to worry, Figures 2 through 4 below guide you through the process. Simply use a miter gauge at the table saw and keep a spacer handy to support the divider and keep it level. With all the bevels cut, you can set the divider off to the side. Don't install it until after the finish is applied.

How-To: MAKE THE DIVIDER & THE BASE

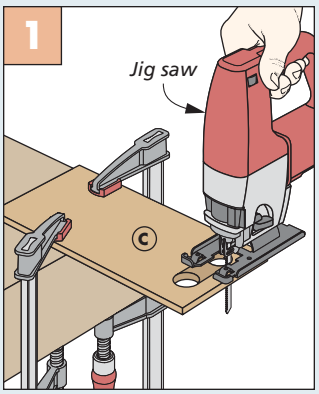

Divider Opening. Use a Forstner bit and a jig saw to cut the opening in the divider.

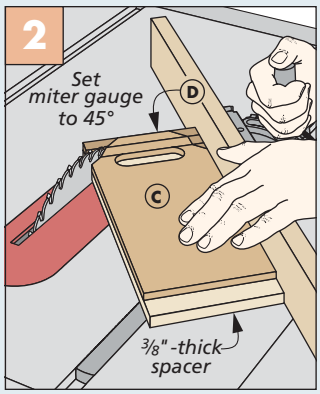

Cut Corners. Cut the corners of the divider assembly using the miter gauge for support.

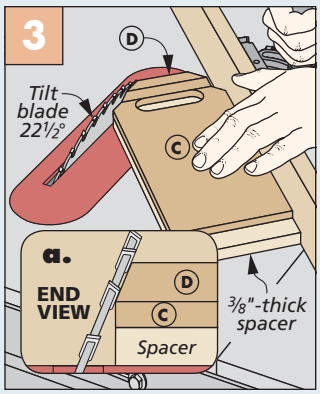

Chamfer Scales. Tilt the blade 22½° to chamfer the end of the scales.

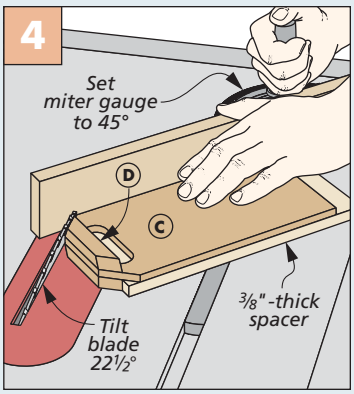

Bevel Back Side. Set the miter gauge at the opposing 45° angle to cut the remaining chamfers.

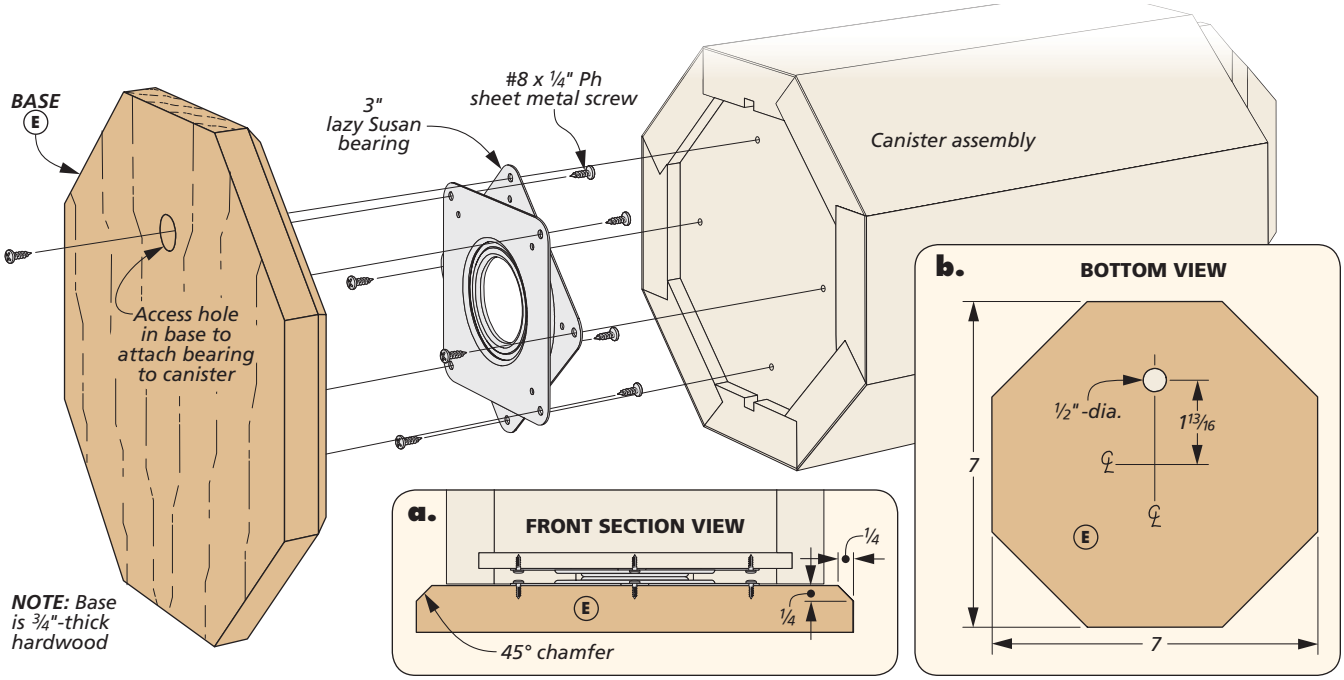

FINAL DETAILS

The final bits of construction to take care of before finishing are to add the base to the knife block. The base not only makes the block more stable, but it also allows the canister to rotate to easily access the knives.

The base is an octagon, like the canister, only slightly larger. The same process used to cut the bottom from Shop Notes on page 64 was used here, also. After the base was cut, I used a router bit to form a chamfer along the top side of the base, as shown in Figure 5 below. Don't attach the base yet, however, you'll want to apply finish first.

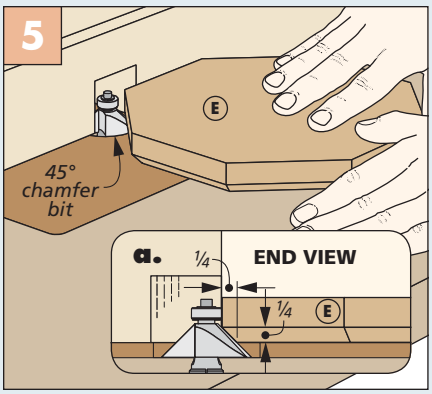

Chamfer Base. Chamfer the top edges of the base at the router table using a 45° chamfer bit.

DYE. To highlight the figure of the veneer, I chose to use a water-based dye. If you've never worked with dye before, the article on page 10 will give you a little bit more information on selecting a dye that's right for you.

Before dying the project, I lightly raised the grain on all of the parts using a damp sponge. The grain was then knocked back down using 400-grit sandpaper. The edge of the divider and the inside of the groove for the divider were taped off to avoid getting any finish on the glue surface.

I used *Transtint* "reddish brown" dye dissolved in water to add color to all of the parts. The water-based dye brushes on smoothly with little worry of brush marks. After the dye was dry, the knife block was finished with multiple coats of satin lacquer, sanding in between coats.

ATTACH DIVIDER & BEARING. With the finish applied to the knife block, it was time to put everything together. I started by first marking the center on the top of the base and positioning the lazy Susan bearing over it. An oversized access hole in the base will allow screws to be driven into the canister bottom. See the main drawing above.

The bearing is first mounted to the base. Then, the canister is flipped over to locate the base on the bottom of the canister. Position the access hole to drive the first screw into the canister. Continue to rotate the base and use the access hole for all four screws.

The divider receives a few small dabs of glue along the edges after the tape is removed. Then, simply slide it into the grooves in the canister, making sure to wipe away any excess glue.

With the base attached, you can load the middle up with kitchen tools and stick the knives to the outside. It's sure to look sharp on any counter. W

Materials, Supplies & Cutting Diagram

A	Staves (8)	¾ x 2½ - 8¼	
B	Bottom (1)	⅜ x 5 - 5	
C	Divider (1)	¼ x 5 1/16 - 10¼	
D	Scales (2)	⅜ x 11/16 - 4 1/16	
E	Base (1)	¾ x 7 - 7	

- (1) 3" Lazy Susan Bearing
- (8) #8 x ¼" Sheet Metal Screws
- (24) ½"-dia. x ⅛" Rare-Earth Magnets
- (1) 2 Sq. Ft. Veneer

¾" x 7½" - 60" Mahogany (3.1 Bd. Ft.)

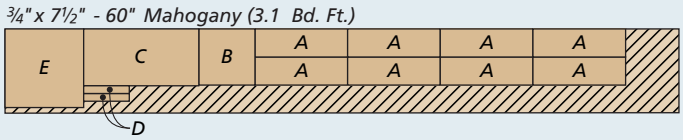

Shop Project

Auxiliary Router Bases

MORTISING

FLUSH-TRIMMING

A handheld router is an incredibly adaptive tool. Increase that versatility by building this trio of accessories to get even more out of yours.

The router is the go-to tool for making a multitude of profiles and a host of joinery operations. The key to success when using a router is having it set up properly to ensure reliable and repeatable cuts. Here, we showcase a few of the shop-made accessories that we turn to quite often to guarantee success and add to the range of this dynamic tool.

FEARSOME THREESOME. The first accessory is a bridge, shown above. Coupled with a pair of hardwood rails, it's the perfect way to plane large sections of rough stock that can't be flattened in a traditional manner (main photo).

Next, is an adjustable mortising jig (left photo above). This jig, paired with a plunge router, allows you to turn out mortises in the thinnest of material, all the way up to 3¼"-thick stock.

The last accessory is perhaps the most versatile. It begins with an oversized acrylic base that can be used alone, or with two hardwood feet for flattening smaller surfaces (right photo above). There's even an option for attaching a vacuum hose for collecting debris.

Written by: Robert Kemp; Project design: Chris Fitch

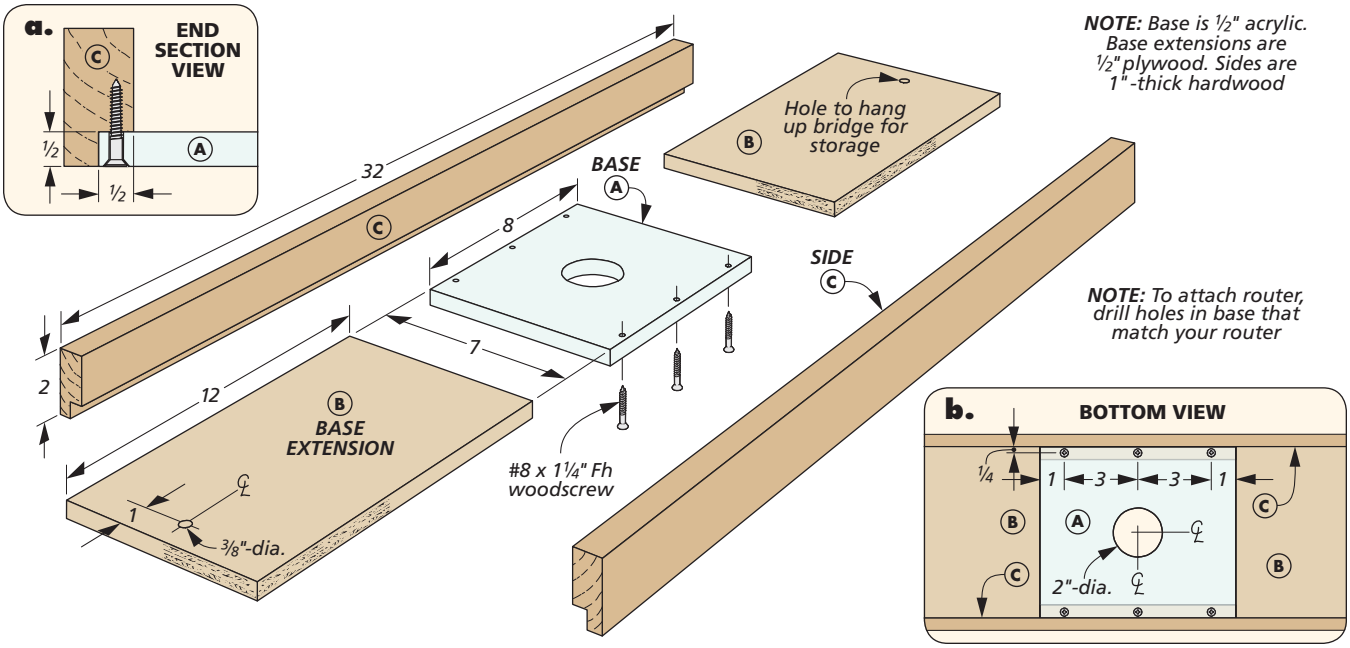

Router **BRIDGE**

All three of the router accessories are pretty straightforward to make. I decided to start with the bridge. No matter which one you build first, you'll notice that all of them use a piece of thick acrylic where the router's base is attached. If you've never worked with this material before, don't worry. It's very easy to machine, and I'll show a method for cleaning the edges that leaves them as smooth as glass.

ACRYLIC BASE. Start by cutting a piece of acrylic slightly oversize for the base. Locate center the hole for the router bit opening and drill it at the drill press (slightly undersized here). I then made a template from a piece of hardboard that's the size of the finished base. It's attached to the acrylic with double-sided tape. A flush-trim bit loaded in the router table is used to clean up the edges. This leaves an amazingly smooth edge that requires no sanding. Figures 1 and 2 below show this process in detail.

BASE EXTENSIONS. The two base extensions are simply pieces of plywood cut to size, but I will mention one thing. Since plywood thickness can vary by manufacturer and region, try to find plywood that comes as close as possible to the same thickness as the acrylic, so the bottom surface is flush.

SIDES & ASSEMBLE. The sides have a rabbet that wraps the base and extensions (Figure 3). You can then assemble the bridge using screws in the base and glue between the extensions and sides.

Materials & Supplies

A	Base (1)	½ acrylic - 7 x 8
B	Base Extensions (2)	½ ply. - 7 x 12
C	Sides (2)	1 x 2 - 32
•	(6) #8 x 1¼" Fh Woodscrews	

How-To: CUT & SHAPE THE BRIDGE PARTS

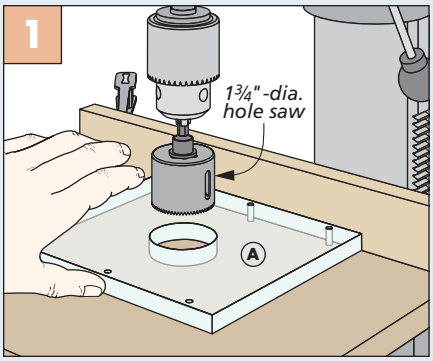

Drill Center Hole in Acrylic Base. Drill an undersized hole in the center of the base for the router bit opening.

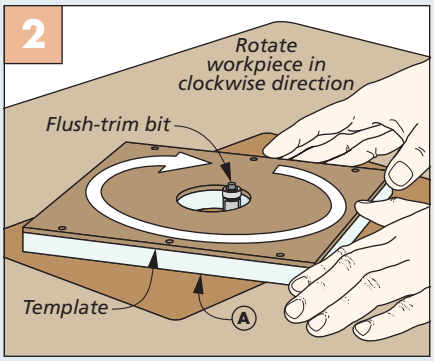

Trim Base. Attach a hardboard template with double-sided tape to trim the acrylic base to final size.

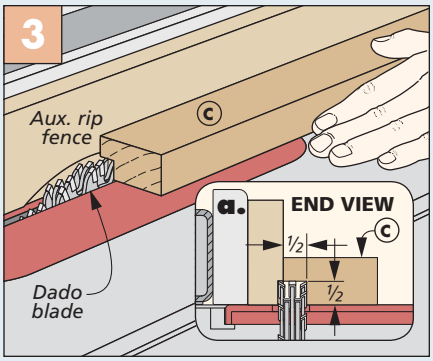

Rabbet Sides. Move over to the table saw loaded with a dado blade to cut the rabbets in the sides.

Illustrations: Peter J. Larson

Mortising **BASE**

Like a lot of things in woodworking, there are typically several ways to get the same end result using different methods. This is certainly the case when making mortises.

You could turn to a dedicated mortising machine, or a drill press loaded with a mortising attachment. Then there's the alternative of cutting a mortise by hand using a chisel and mallet.

But my favorite option for quick mortises is using a handheld router. A basic straight bit leaves smooth side walls, and you're only left with squaring the ends of the mortise with a chisel.

Which brings us to the next router accessory in our trio — the adjustable mortising base shown at right. This base attaches to the plunge base of a router and has two fences that can be snugged up against a workpiece to guide the router. This set up allows for consistent results when you need to crank out a lot of mortises.

▲ The acrylic baseplate on this adjustable mortising base makes it easy to see your work. The adjustable fences can accommodate a 3¼"-wide workpiece.

WORK THE ACRYLIC. Like the router bridge, the mortising base uses a thick piece of acrylic for its baseplate. And like the bridge, I used the same method to cut the acrylic base to size — a hardboard template. One difference from the bridge, however, is the need for a slot in the center for the bit opening. I went with a slot on this particular jig to create room for chips and debris to exit the mortise opening.

Figures 1 and 2 below show the method I used for creating the slot. You'll define the ends of the slot at the drill press before moving to the router table to remove the rest of the waste. Be sure to make multiple passes, raising the bit after each.

FENCE FRAMES. The two plywood fence frames provide the adjustability for this base, as well as a place to mount the hardwood fences. I started by cutting two rectangular blanks to size

How-To: MAKE THE PARTS FOR THE MORTISING BASE

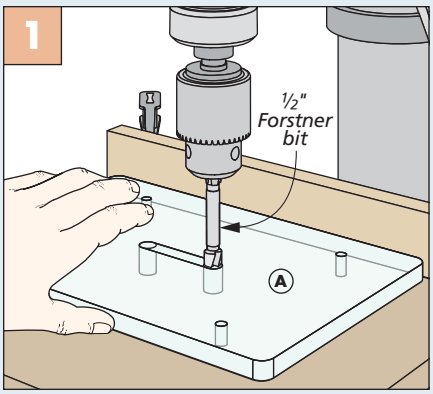

Define Ends of Slot. Use the drill press to locate the ends of the center slot on the acrylic baseplate.

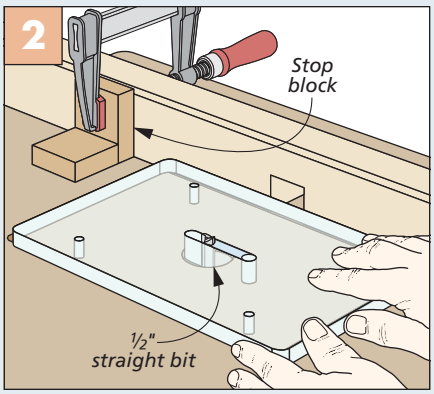

Remove the Slot Waste. Head back to the router table to finish the slot. A stop block clamped to the fence is helpful.

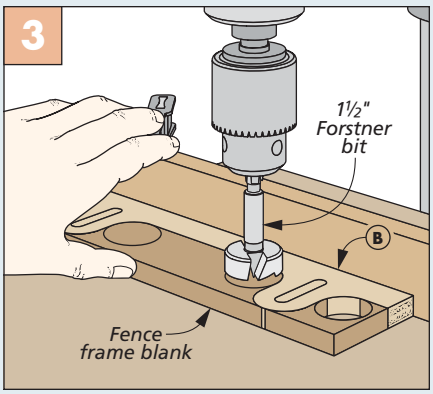

Shape Fence Frames. Drill four holes in the fence frame to define the radius of the inside corners.

Woodsmith GO ONLINE EXTRAS

For full-sized patterns, go to Woodsmith.com

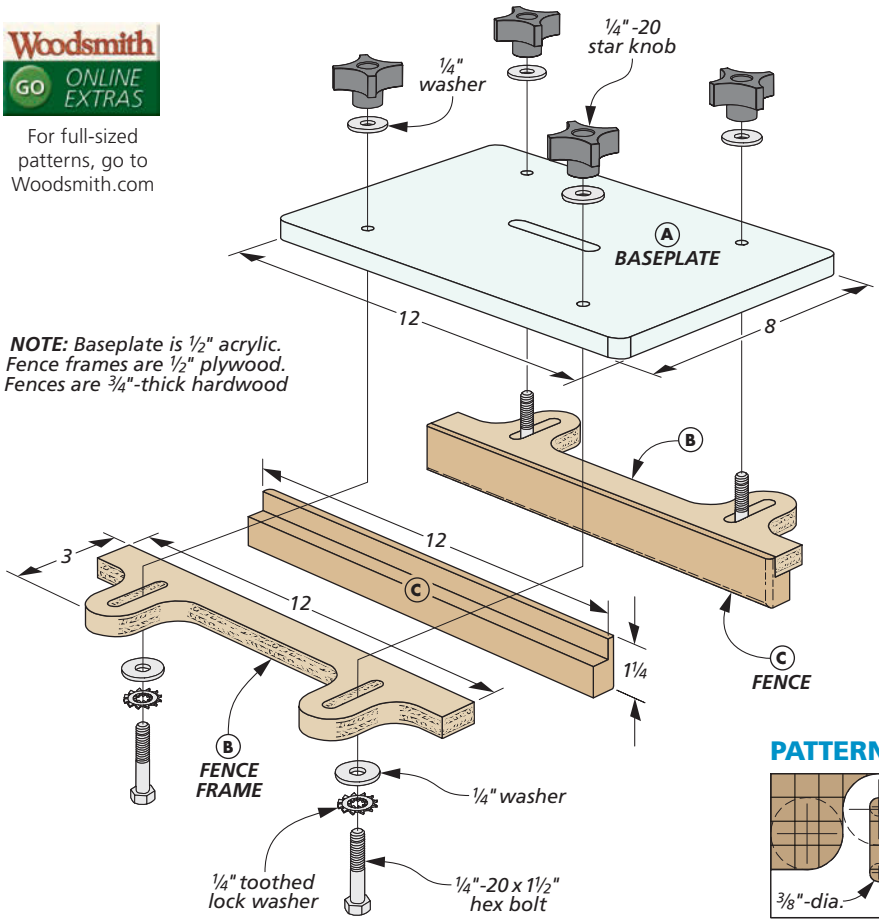

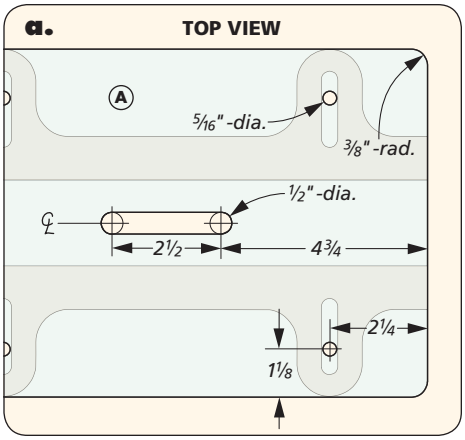

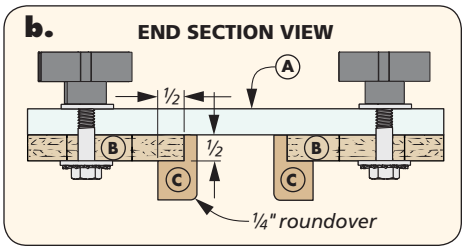

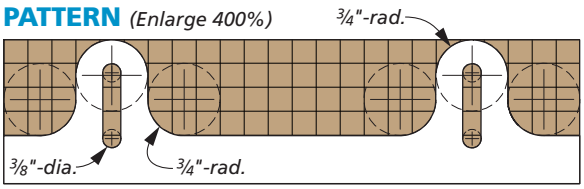

for the frames. The pattern shown at right can be copied and attached to the blanks to help with the rest of the shaping. Cut the two adjustment slots first. You can use the same method here as you did for the acrylic base. I then drilled four large holes to establish the inside curves of the frames, as shown in Figure 3 on the previous page. Then move to the band saw to remove the rest of the waste (Figure 4) and sand the frames smooth with a sanding drum.

TWO FENCES. To finish up the mortising base, cut the two fences to size and rabbet the inside edge at the table saw, as shown in Figure 5. I eased the edges on these pieces as in detail 'b' before gluing them to the frames.

SETTING UP FOR MORTISING. Using the mortising base couldn't be much easier. With the mortise location marked on the workpiece, clamp it securely in a vise. Set the mortising base (with router attached) on the workpiece and center the bit between the layout marks (for a centered mortise). Slide one fence up to the workpiece and tighten it. Then snug the other fence to the side of the workpiece and tighten. You're now ready to make the mortise.

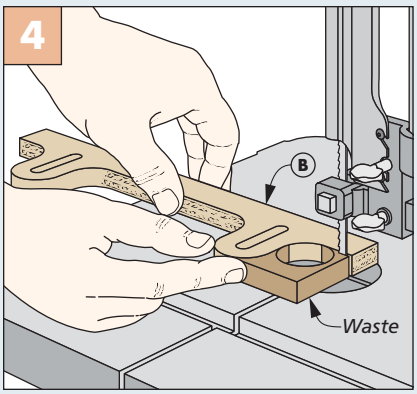

Finish Up Fence Frames. Use a band saw to finish cutting out the frames. Sand them smooth when done.

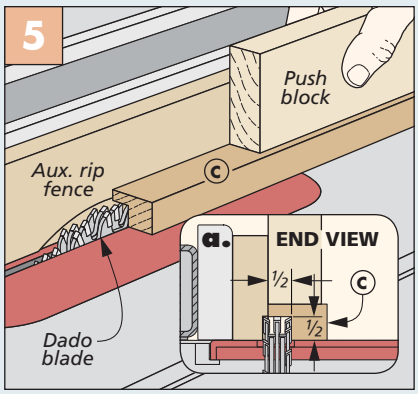

Rabbet Fences. A quick trip to the table saw completes the rabbets in the fences before assembling.

Materials & Supplies

A	Baseplate (1)	½ acrylic - 8 x 12
B	Fence Frames (2)	½ ply. - 3 x 12
C	Fences (2)	¾ x 1¼ - 12

- (4) ¼" Toothed Lock Washers
- (4) ¼"- 20 Star Knobs
- (4) ¼"- 20 x 1½" Hex Bolts
- (8) ¼" Washers

Multi-Use **OVERSIZED BASE**

The final router accessory is perhaps the most versatile of the bunch, and quite possibly the one you'll be reaching for the most. As the photos here show, this router base starts out as an oversized acrylic base that can be used as a stand-alone fixture, or with the two "feet" that raise the base off the worksurface. This turns it into a compact version of our bridge for flattening surfaces on a smaller scale, like the through tenons shown in the upper photo.

Add a couple of other pieces and the oversized base can be attached to a dust collection system for edge routing (left inset photo). Or, if working in the middle of a large surface, mount the dust port to the top of the base (right inset photo). A pair of tall, comfortable handles makes this base easy to maneuver, however it's used.

▲ This one router base accessory can be configured in several different ways to help you get the most from your handheld router. A pair of tall handles make it incredibly stable.

FAMILIAR CONSTRUCTION. Building this oversized base accessory follows a similar route as the previous bases. But instead of just cutting the acrylic parts oversize and using a flush-trim router bit to clean up the edges, I also made the hardwood parts using the same method. The patterns in the right margin on the next page can be used to make a hardboard template for each base part.

Now, cut all of the parts slightly oversized (Figure 1) and then head to the router table to flush-trim them to their final size (Figure 2).

SIZE DUST PORT. The one part you'll need to customize on this base is the hole in the acrylic dust collection cap to fit

How-To: SHAPE THE ACRYLIC FOR THE BASE

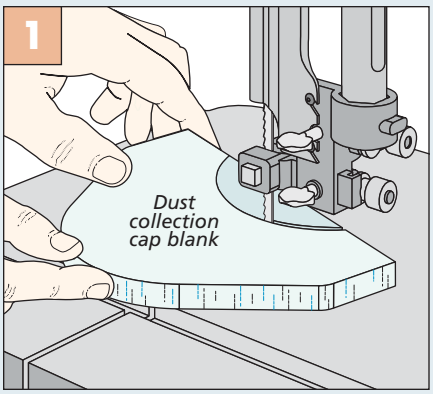

Rough Out the Acrylic Parts. The band saw works just fine to cut out the curved portions of the acrylic parts.

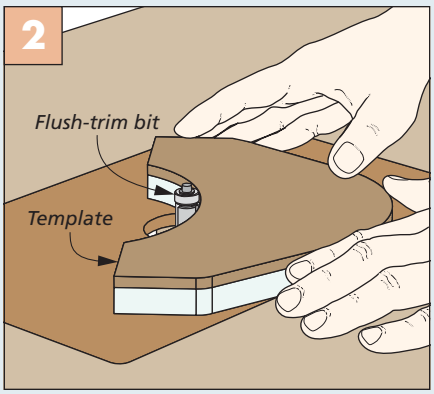

Flush-Trim to Size. As before, use a flush-trim bit in the router table to bring the acrylic parts to their final shape.

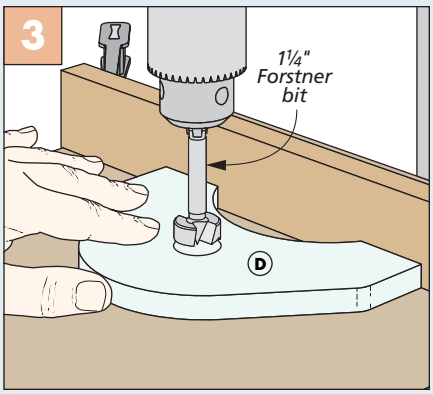

Dust Collection Hole. Match the size of the dust collection hole to the hose that you will be using.

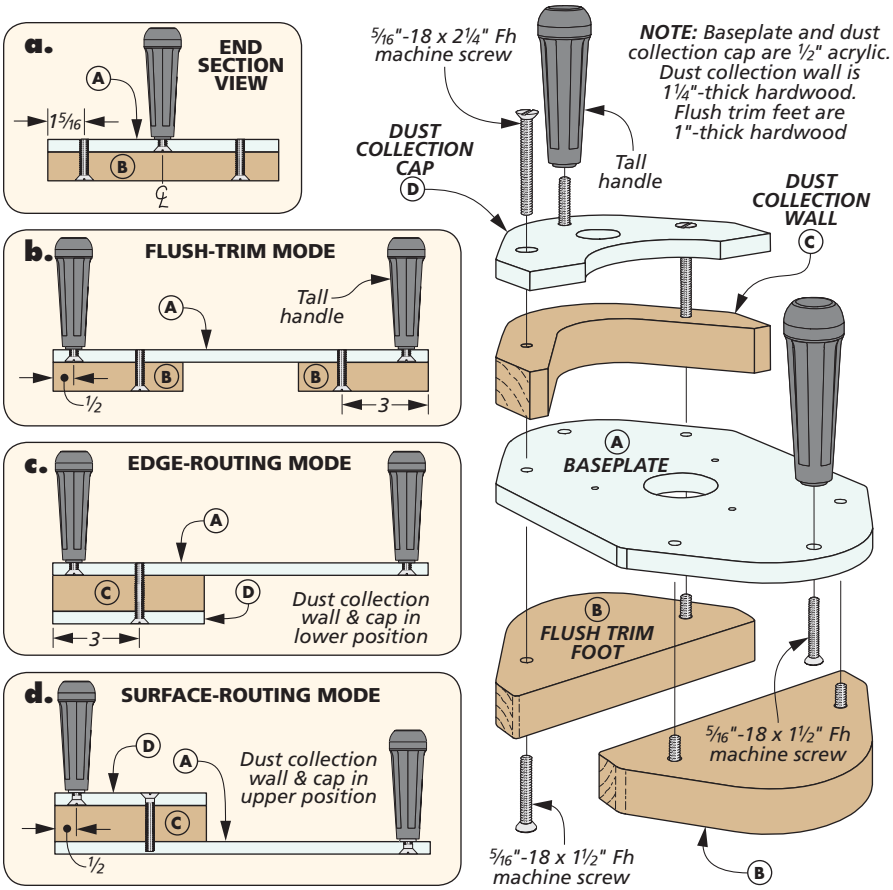

PATTERNS (Enlarge 400%)

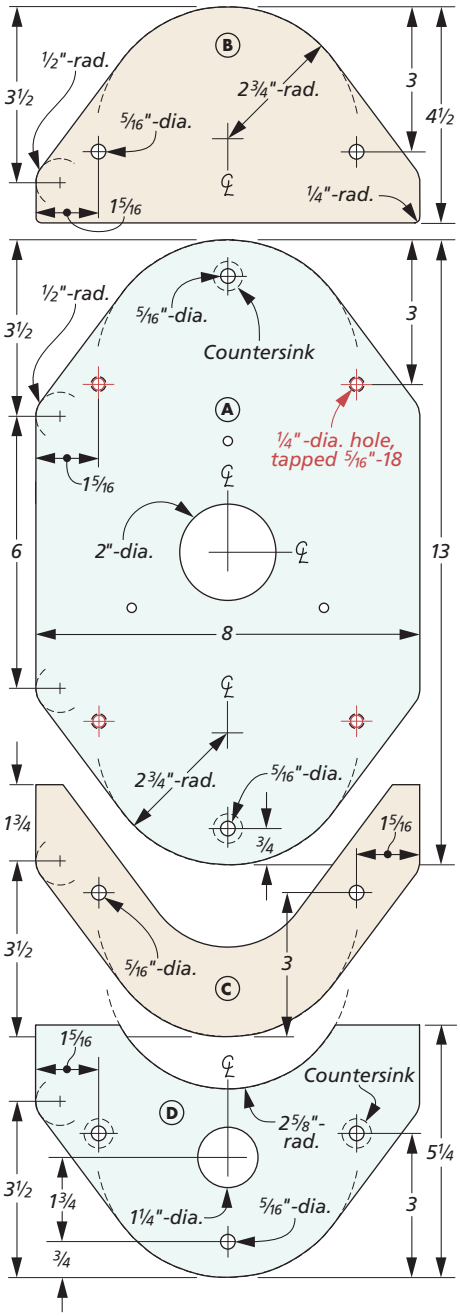

your vacuum hose. Make the hole in your template this same size for flush-trimming, as shown in Figure 3.

DRILL & TAP HOLES. Finally, you can drill the necessary holes for joining the parts together (Figure 4). You'll notice that four holes in the baseplate have threads cut into them to allow the machine screws to be moved around for switching between the different configurations. This can be done with a standard metal tap, as shown in Figure 5, below. All that's left is adding the handles and deciding which of your new router accessories you're going to put to work first. W

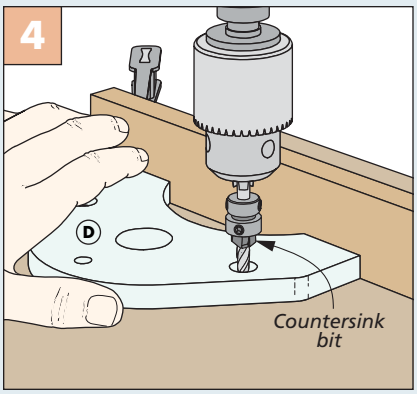

Mounting Holes. Locate and drill the countersunk mounting holes in the acrylic and hardwood parts.

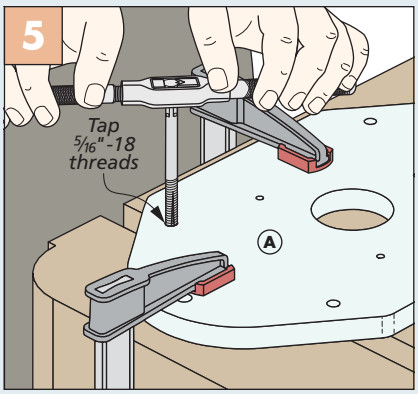

Tap the Threads. Use a standard metal tap to make the threaded holes in the baseplate.

Woodsmith GO ONLINE EXTRAS For full-sized patterns, go to Woodsmith.com

Materials & Supplies

A	Baseplate (1)	1/2 acrylic - 8 x 13
B	Flush Trim Feet (2)	1 x 4 1/2 - 8
C	Dust Collect. Wall (1)	1 1/4 x 5 1/4 - 8
D	Dust Collect. Cap (1)	1/2 acrylic - 5 1/4 x 8

- (6) 5/16"-18 x 1 1/2" Machine Screws
- (2) 5/16"-18 Tall Handles
- (2) 5/16"-18 x 2 1/4" Machine Screws

Designer Project

Floating Display Shelves

This shelf system can snake its way across your wall in any path your heart desires. Hidden fasteners anchor the shelves securely to the wall.

You've heard the phrase, "greater than the sum of its parts." Well, that sentiment applies here. This display shelf is made of three parts that link together in any configuration you like. You're only limited by your imagination and the available wall space.

PERFECTLY SIMPLE. There's nothing fancy about the parts. For starters, there is series of horizontal shelves and vertical uprights. These are made of two layers of maple plywood and trimmed with hardwood edging. These components are connected by some cherry corner blocks. The corner blocks add a nice contrasting element to the look of the unit. But they're integral to how the shelf comes together.

The corner blocks are glued to the shelves using simple but strong tongue and groove joinery. A pair of connector bolts passes through each of the corner blocks and into threaded inserts installed in the uprights.

HARDWARE. As for the hardware that holds the shelves on the wall, there's not much to that either. Mounting pins are attached to wall studs and seat into holes in the shelves for a hidden support system. The pins take a little focus to install, but it's worth the effort.

If your wall is big enough, you could just build the shelf configuration the way it's shown here. But regardless of the configuration, the shelf can be customized to suit your available wall space.

Written by: Erich Lage; Project design: Chris Fitch

Construction Overview / OVERALL DIMENSIONS: 111¼"W x 49"H x 10"D (Horizontal)
OVERALL DIMENSIONS: 38½"W x 55½"H x 10"D (Vertical)

HORIZONTAL CONFIGURATION

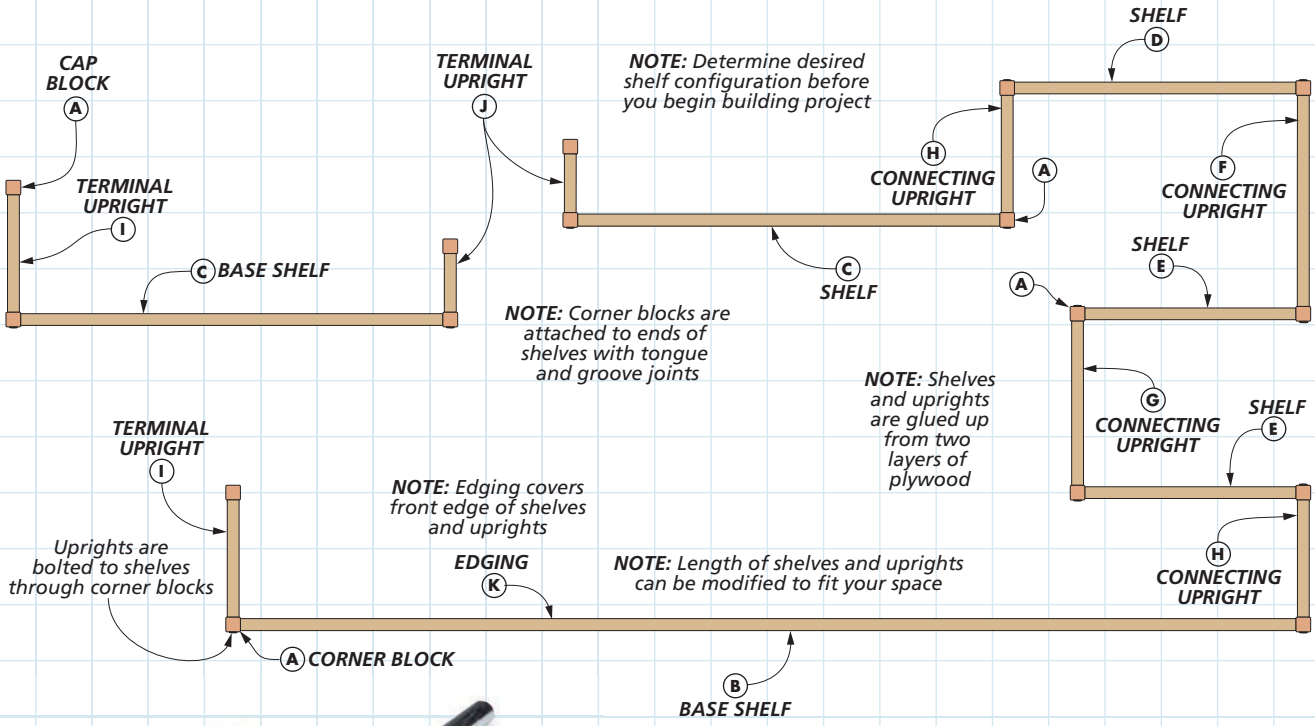

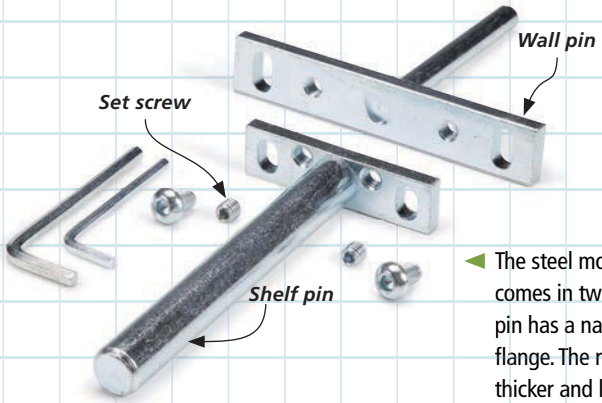

◄ The steel mounting hardware comes in two parts. The wall pin has a narrow rod and wide flange. The rod on the shelf pin is thicker and longer.

VERTICAL CONFIGURATION

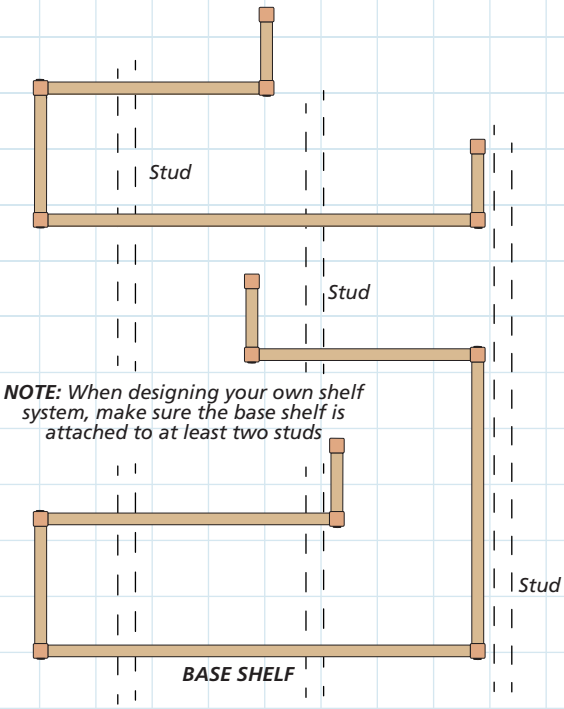

◄ Once the wall pin is installed and the shelf pin is attached to it and adjusted, just slide the shelf in place. A groove along the back of the shelf hides the bracket.

Illustrations: Harlan Clark

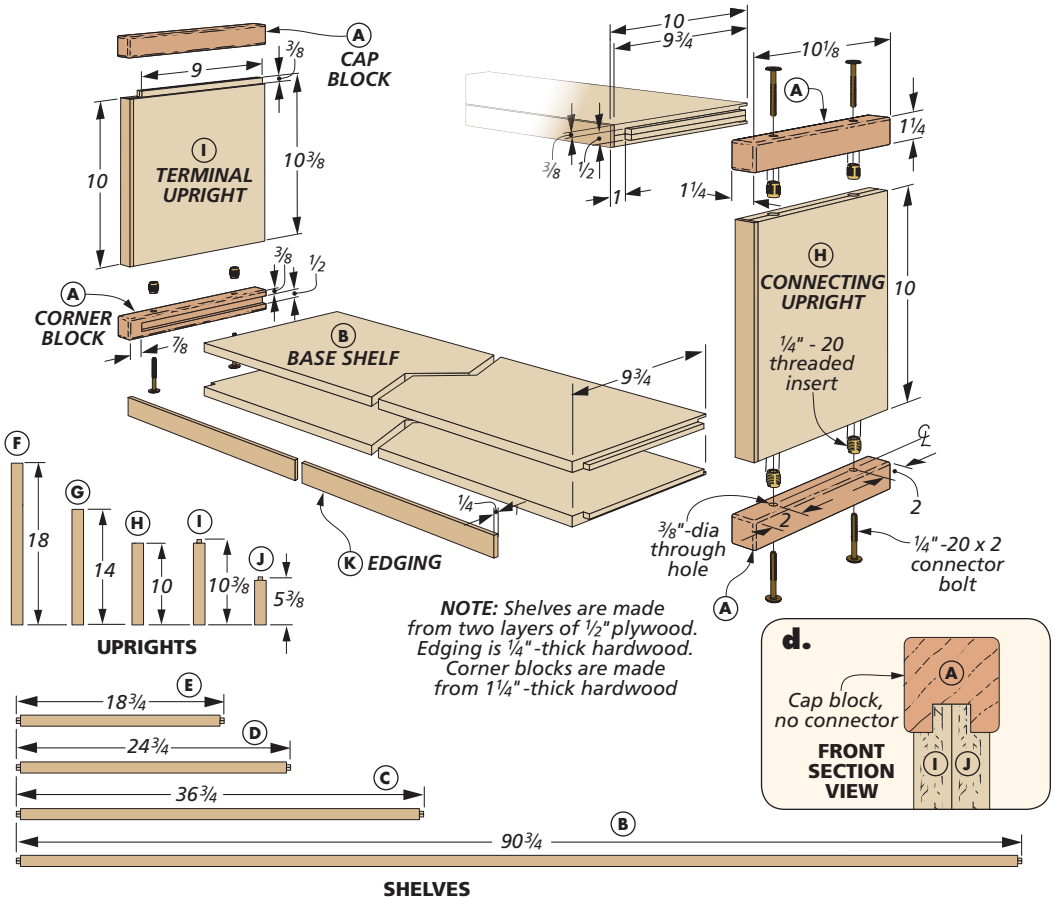

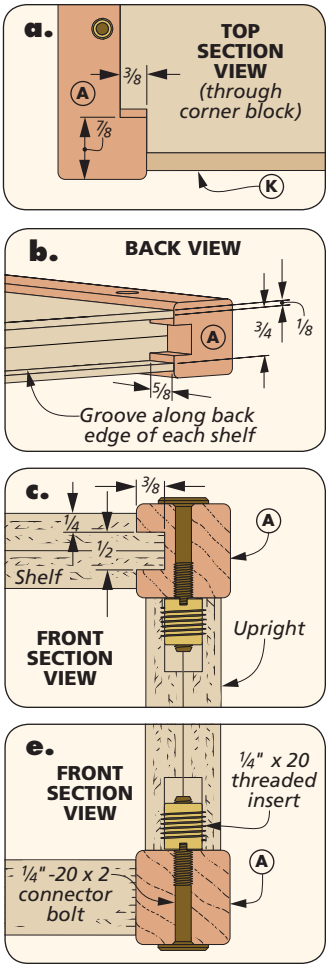

Making the SHELF PARTS

If you're building the same unit that is shown on page 30, the main drawing above gives the length of the shelves and uprights that you'll need. Regardless of the configuration, it's best to start by making the corner blocks.

CORNER & CAP BLOCKS. The corner and cap blocks tie the shelves and uprights together. Each has a stopped groove to attach it to a shelf or terminal upright. Figure 1 below gives you the details for routing the corner and cap blocks.

At this point, I set aside the cap blocks that will attach to the terminal uprights and turned my attention to the corner blocks. As you can see in the main drawing above, each has two through holes drilled in them (Figure 2). These let

How-To: MAKE THE CORNER BLOCKS

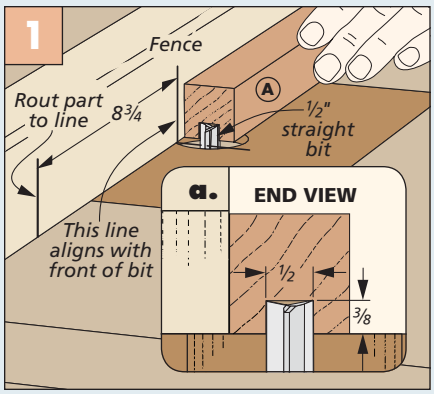

Grooves First. A straight bit in the router table is the easiest way to make the stopped grooves for the mortise.

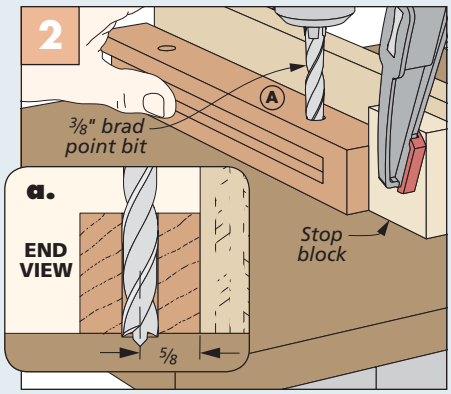

Drill for Connectors. Drill two holes in each corner block for the bolts that connect the shelves to the uprights.

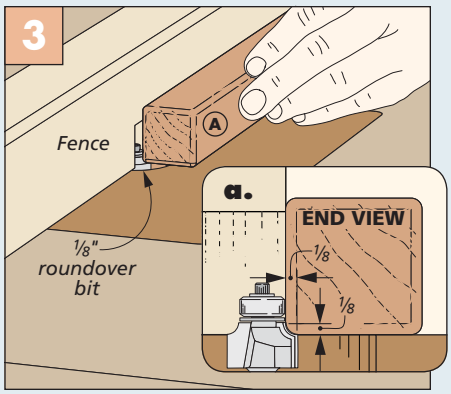

Ease the Edges. To provide a smooth transition between the corner blocks and shelves, ease the edges and ends.

you tie the shelves to the uprights with connector bolts. To dress up the corner blocks, I used an ⅛" roundover bit and eased all the edges (Figure 3).

SHELVES & UPRIGHTS

The shelves and uprights are next up on the to-do list. As you can see in the main drawing on the previous page, they're made up of two layers of plywood that are glued together and have tongues cut on the ends. More on that in a bit, first up is to size the parts.

ROUGH SIZES. The easiest way to go about this is to rip enough plywood to make all the shelves and uprights for your configuration. To make the glueup manageable, cut the parts slightly larger in width and length. This leaves you with a little wiggle room when gluing each section together.

FINAL SIZES. When the glue is dry, rip the shelves and uprights to final width (Fig. 1). This is an opportune time to glue the hardwood edging to the fronts of all the parts. Figure 2 shows how to the trim the edging flush with a router. Back at the table saw, it's time to trim all the parts to their final length (Figure 3).

MAKE THE TONGUES. For me, the quickest way to make the tongues on the end of each shelf was to chuck a ⅜" rabbet bit into my router (Figure 4). The tongues are only on the shelves and tops of the terminal uprights. I set aside the connecting uprights to avoid any confusion during this machining step. When the routing is done, there's a little work left with a hand saw to trim back the shoulders of the tongues at the front.

GROOVE THE SHELVES. With the tongues complete, set the uprights aside for now and cut a groove in the back of the shelves, as detailed in Figure 5. This groove serves two purposes. First, it creates a channel for the flanges of the mounting hardware. Second, the two thin edges that the groove leaves on the top and bottom of the shelf are easier to cut or sand to shape if the shelves need to be scribed to an irregular wall shape.

DRILL ENDS OF UPRIGHTS. It's time to do some work on the uprights. As you can see in the main drawing on the previous page, each connecting upright has two threaded inserts in each end. To drill the holes for these inserts, I made the jig you see in Figure 6. This will guide the drill bit squarely into the upright at the appropriate distance from the back edge. It's just as critical to install the inserts square as well.

STAIN AND FINISH THE PARTS. Before gluing the corner blocks in place, I used a cherry stain on them. Once dry, and the parts are glued together, I sprayed everything with two coats of lacquer. Now it's time to install the shelf.

How-To: MAKE THE SHELVES & UPRIGHTS

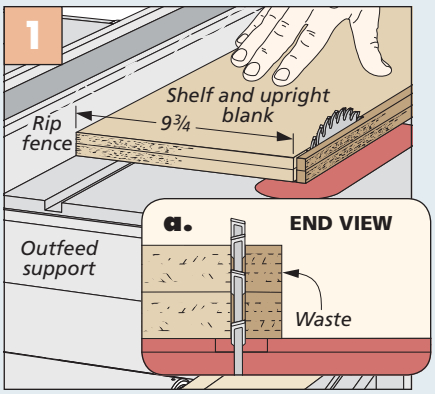

Rip Parts to Width. After the glue is dry, rip all the shelves and uprights to their final width at the table saw.

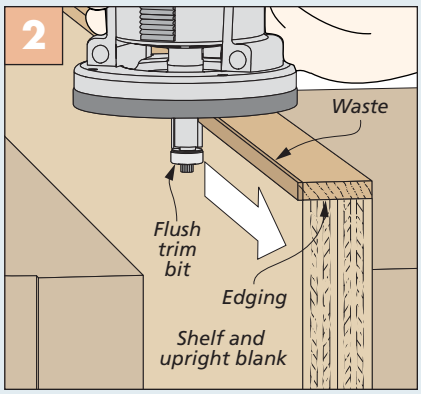

Flush-Trim Edging. Use a router with a flush trim bit to finish the edging on the shelves and uprights.

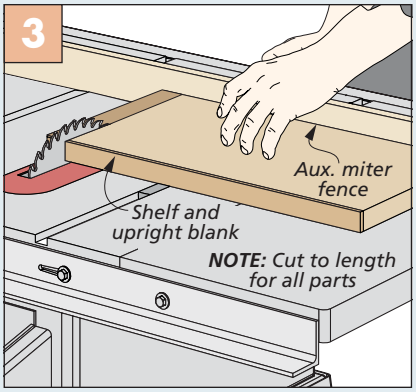

Cross Cut to Length. With a board attached to your miter gauge, trim shelves and uprights to final length.

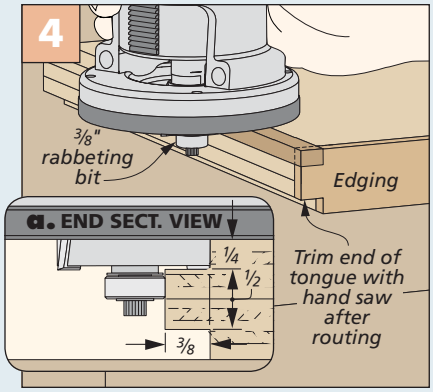

Rout the Tongues. A rabbeting bit is used to cut the tongues on the ends of the shelves and terminal uprights.

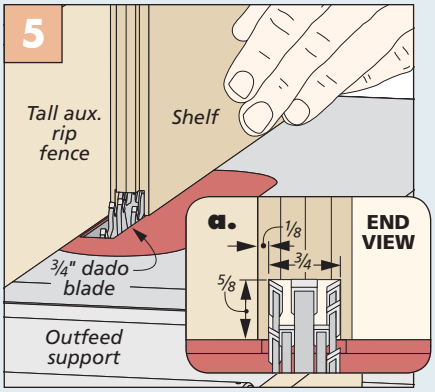

Groove in Shelves. A dado blade and a tall auxiliary fence is the safest way to cut the grooves in the shelves.

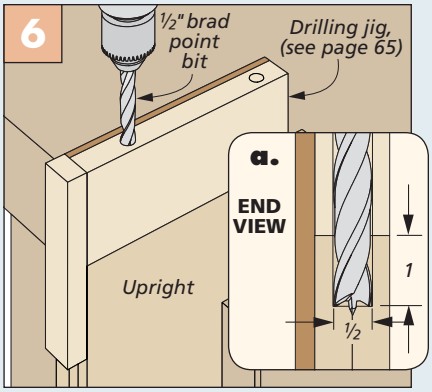

Drill Holes in Uprights. To keep the holes in the uprights square, use a jig that's clamped to the upright.

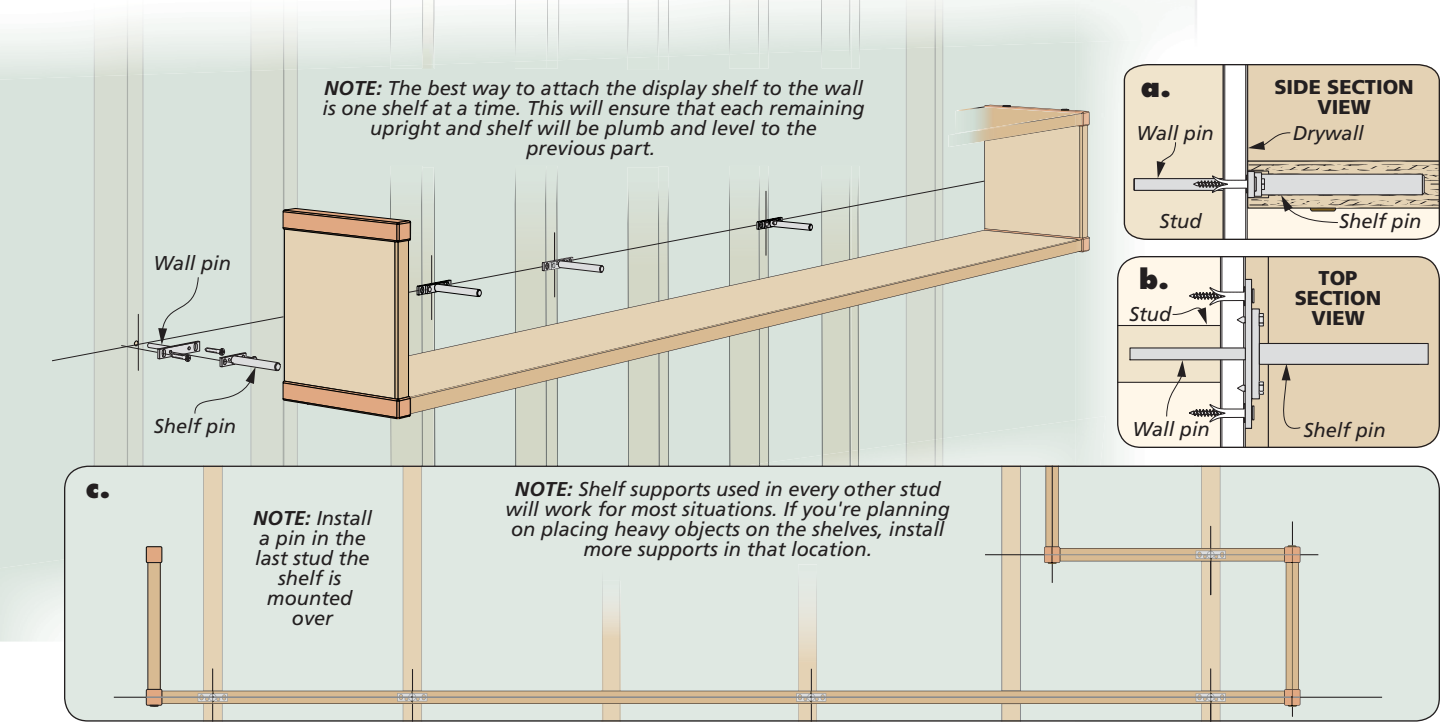

Installing the **SHELF UNIT**

The sleek look of the wall shelf is enhanced by the hardware that's used to attach it to the wall. This hardware consists of two pieces. One support (wall pin) is anchored to the wall by drilling a hole in the center of a wall stud. The other support (shelf pin) is housed in a hole in the shelf. They're both hidden in the groove in the back of the shelf and attached together with screws through matching flanges (detail 'a' and 'b').

I want to mention here that it's better to proceed one shelf at a time. If you try to layout and drill all the holes for the wall pins at the same time you run the risk of being off your mark.

WALL PINS FIRST. The first order of business is to install the wall pins. This starts by locating the studs in your wall and laying out the locations for each shelf (Figure 1). Take the time to make sure the layout lines are level and plumb.

Now what you want to do is drill a hole dead center in the wall studs you've chosen for pins, as shown in Figure 2. It's important to drill these holes for the wall pins perpendicular to the wall and with the proper size drill bit. Then slide the wall pins in place and anchor them to the wall through the flanges, as detailed in Figure 3.

HOLES IN THE SHELF. The next task is to transfer the wall pin locations to the base shelf. You might have to call upon a friend to hold the shelf while you mark the locations (Figure 1 on the next page). After transferring the mark to the center of the groove on the back of the

How-To: LOCATE & INSTALL BASE SHELF WALL PINS

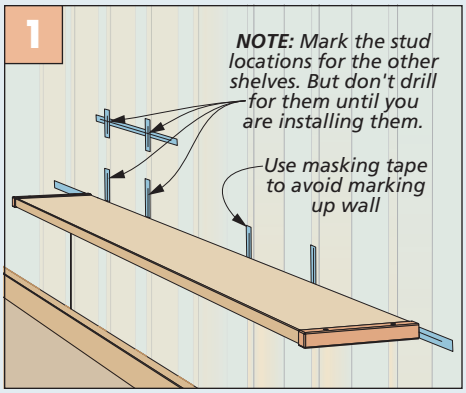

Base Shelf First. Although you're only working on the base shelf now, you can draw plumb lines for the shelves above.

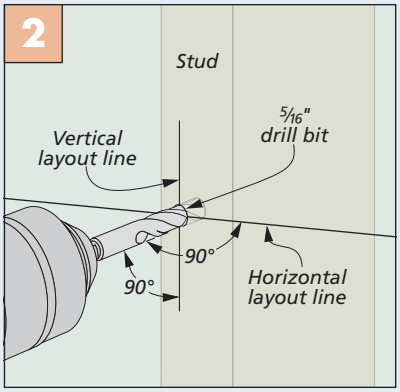

Drill Wall Studs. When drilling the holes for the wall pins, drill perpendicular to the wall.

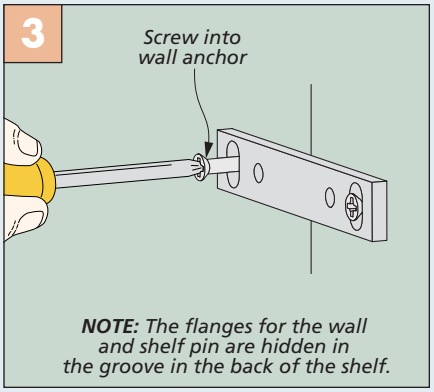

Wall Pins. Since all the weight of the shelf is on the rods, screws and wall anchors will hold the flange in place.

shelf with a square, I traced that mark to the face of the shelf. Then I used the guide block you see in Figure 2 to start the holes for the shelf pins.

INSTALL BASE SHELF. As I mentioned earlier, the shelf pins support the shelves. They're attached to the wall pins through the flanges. There are also set screws in the flange that let you fine-tune the angle of the shelf pins to level the shelf if needed (Figure 3). When the pins are aligned properly, just slide the base shelf onto the pins. Now you can start assembling the rest of the display shelf. This starts with attaching an upright to the base shelf you just installed.

BOLT ON UPRIGHT. Figure 4 shows how to attach an upright to the base shelf. This is a straightforward affair that involves joining the upright to the shelf with a pair of connector bolts into the threaded inserts in the upright. When the bottom connection is secure, you can focus on the next shelf.

ONWARD & UPWARD. Installing the next shelf starts with loosely attaching it to the upright and cutting a spacer to hold it level in place (Figure 5). This frees your hands so you can dial in the exact location of the wall pins for this shelf. When you're confident about this mark, remove the shelf and drill the holes for the wall pins like you did when working on the base shelf.

After installing the wall pin, set the shelf and spacer back in place. Now draw a line on the shelf where the hole for the shelf pin needs to go. Drill the hole in the shelf with the guide block like before. Then back at the wall, attach the shelf pin to the wall pin at the flanges and slide the shelf in place. (Although the pins are holding the shelf at this time, I left the spacers in place for the whole installation process.) Now tighten the connector bolts (Figure 6).

REPEAT. Okay, you've completed the cycle of installing a shelf, an upright, and another shelf. So you're back to installing the next upright. All you have to do is repeat the same steps for the remaining parts.

This process may seem a little tedious, but it's worth the effort. Your reward will be that you have a display shelf that seems to float effortlessly on the wall. W

How-To: INSTALL BASE SHELF & UPRIGHTS

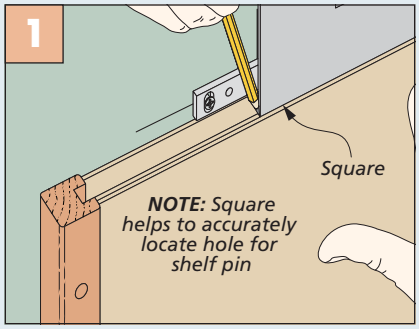

Base Shelf Pin Holes. With a helper, use a square to mark the location of the pins in the groove in the shelf.

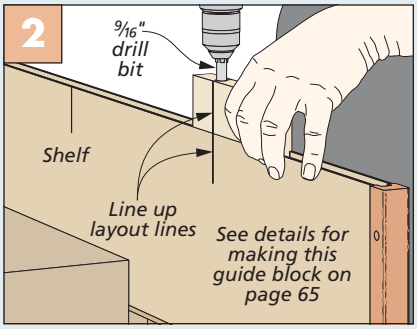

Drill Shelf Pin Holes. A simple guide block starts the hole square. Remove it and finish drilling to the proper depth.

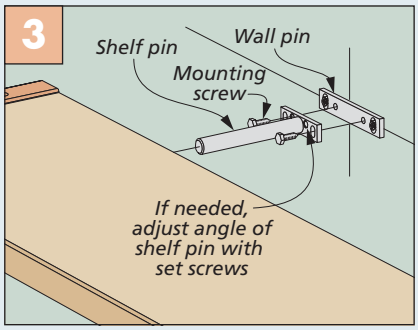

Attach the Shelf Pin. The shelf pin attaches to the wall pin. Set screws allow you to adjust the angle.

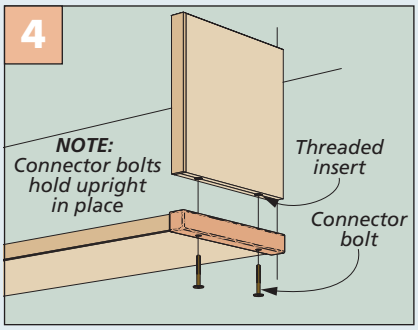

Bolt on Upright. Connector bolts through the corner blocks tie the uprights to the shelves.

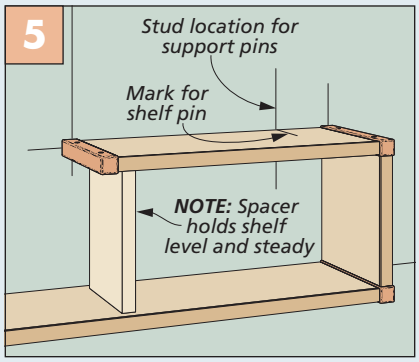

Next Shelf. Loosely attach the next shelf to the upright. Then repeat the wall and shelf pin installation.

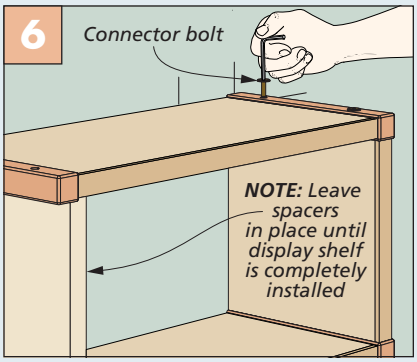

Install Shelf. Tighten the connector bolts in the first upright before moving on to the rest of the display shelf.

Materials, Supplies & Cutting Diagram (Horizontal Display)

A	Crnr./Cap Blocks (16)	1¼ x 1¼ - 10⅛
B	Base Shelf (1)	1 ply. - 9¾ x 90¾
C	Shelves (2)	1 ply. - 9¾ x 36¾
D	Shelf (1)	1 ply. - 9¾ x 24¾
E	Shelves (2)	1 ply. - 9¾ x 18¾
F	Conn. Upright (1)	1 ply. - 9¾ x 18
G	Conn. Upright (1)	1 ply. - 9¾ x 14
H	Conn. Uprights (2)	1 ply. - x 9¾ x 10
I	Term. Uprights (2)	1 ply. - 9¾ x 10⅜
J	Term. Uprights (2)	1 ply. - x 9¾ x 5⅜
K	Edging (2)	¼ x 1- 294 rgh.

- (12) Wall Pin Sets
- (24) ¼"-20 x 2" Connector Bolts
- (24) ¼"-20 Threaded Inserts
- (24) Wall Anchors

ALSO NEEDED: *Three 48" x 96" sheets of ½" birch plywood*

Shop Project

Mobile Clamping Station

This clamping station is a great multitasker. One side of the top hosts an array of hold-downs. The other supports your pipe clamps.

One of the constant complaints I hear from woodworkers is about shop space — the lack of it, that is. The lament is mostly along the lines of how space is gobbled up during the various phases of building a project. Solving that problem is where this clamping station shines.

That's because this top has three distinct worksurfaces. To change the worksurface, just back out the studded knobs that hold the top in place. The top pivots on a central bolt to the opposite side.

As you see in the photo above, one face is designed to hold things in place while you work on them. This is accomplished in two ways. First, there's a crosshatch pattern of dovetail grooves that are cut into the surface. These grooves hold a clamp called the *Matchfit* dovetail clamp. Then, centered inside each square is a common ¾" dog hole. There's a wide array of accessories that you can use here. The article on page 14 gives you a starting list of things to consider.

If you flip the top to the other face, you'll find a clamping grid. The open grid is made of plywood pieces notched to cradle pipe clamps.

WAIT, THERE'S MORE. To complete the trifecta of utility, there's one more surface that's available. The front and back edges of the top have a T-track installed to give you the ability to clamp workpieces in a vertical orientation. (More on that later). Turn to the next page and let's get started with the base assembly.

Written by: Erich Lage, Project design: Dillon Baker

Construction Overview / OVERALL DIMENSIONS: 51⅛"W x 36¼"H x 30"D

Long-lasting plastic laminate surface is easy to maintain

Thick, plywood top works well with hold-downs and other clamping tools

Notches in the grid side of the top cradle pipe clamps

Studded knobs lock the top in place

T-track in the side of the top gives you more clamping options

The top pivots on strong hardware

A storage box conveniently holds needed assembly tools close at hand

NOTE: Page 67 has the details for the hardware used on the clamping station

Large locking casters make it easy to move the station around

Two layers of plywood used for the bottom and sides make for a strong base

The top is locked firmly in place with four knobs that thread into inserts installed in the ends of the rotating top.

The Matchfit dovetail clamp slides into any position on the top by following the dovetail grooves that cover the surface.

The flip side of the table is a gridwork that's perfect for keeping pipe clamps in place while gluing up a project.

Illustrations: Harlan Clark

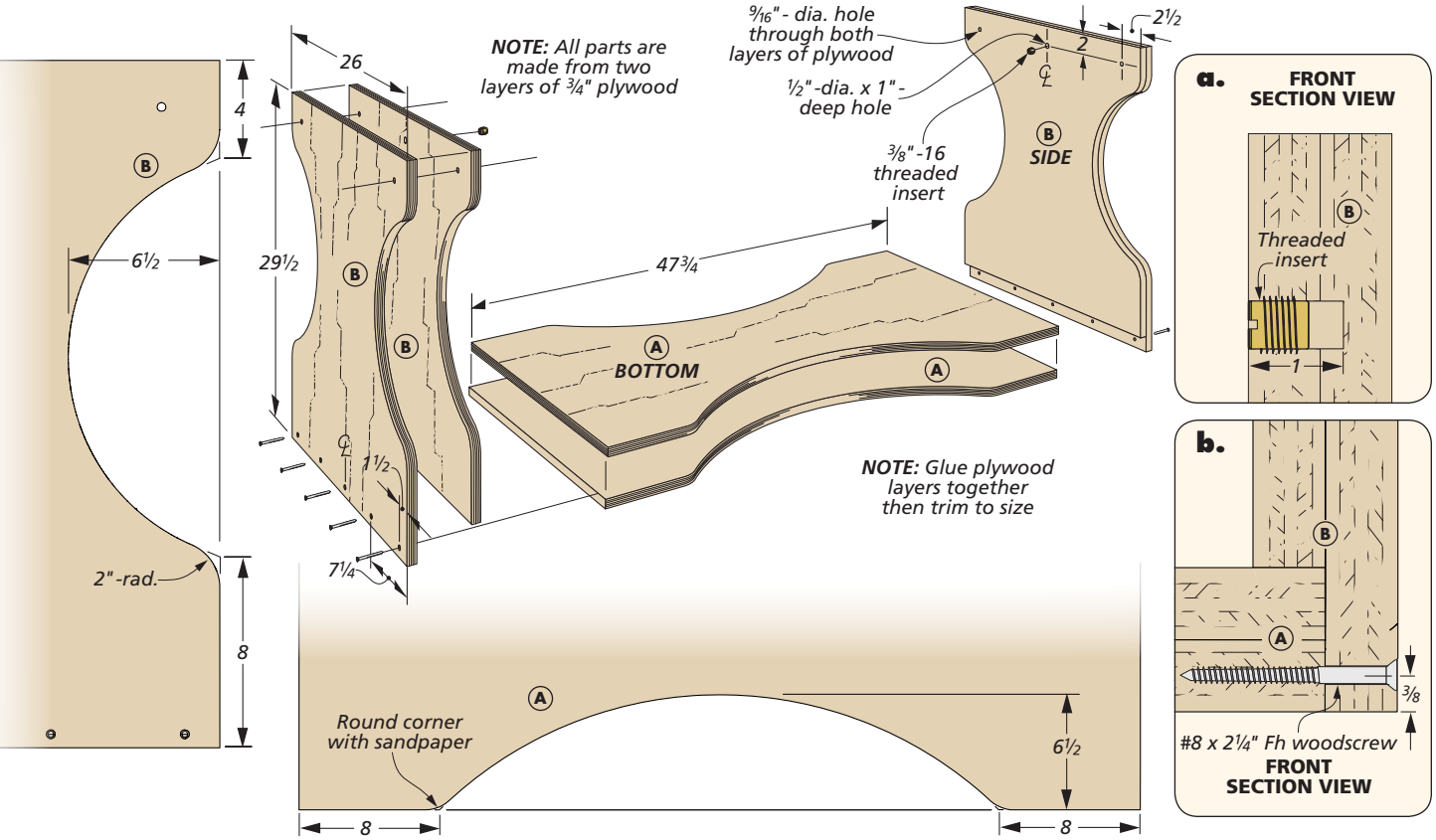

A sturdy **BASE ASSEMBLY**

It's easy to hit the ground running on this project, starting with the bottom and sides. These parts are made of two layers of plywood sandwiched together with glue, trimmed to size, and finished off with a little shaping and joinery at the table saw. Later, I'll make a storage box to add to this base assembly.

SHAPING THE PARTS. I started by cutting and gluing up oversized panels for the bottom and the sides. After the glue dried, I trimmed the pieces to their final sizes. To provide some clearance when standing at the station, I decided to cut an arc on the front and back edges of the bottom. This arc (below the main drawing above) is easy to lay out, as Figure 1 shows. Then with a jig saw, I cut the arcs to the waste side of the line (Figure 2). This will leave you with a little sanding for cleanup.

I liked the look of the arc so much that I repeated it in the sides, as well. You'll note in the detail to the left of the main

How-To: CUT THE ARCS & RABBETS

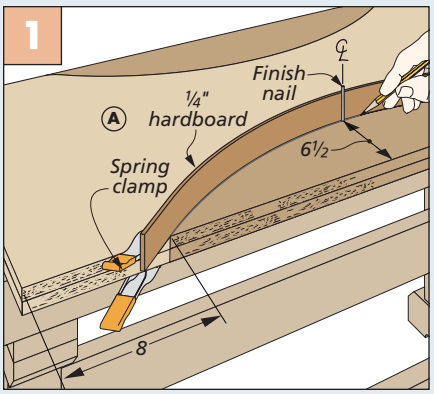

Lay Out the Arc. Lay out the arc on the base pieces with two spring clamps and a length of hardboard.

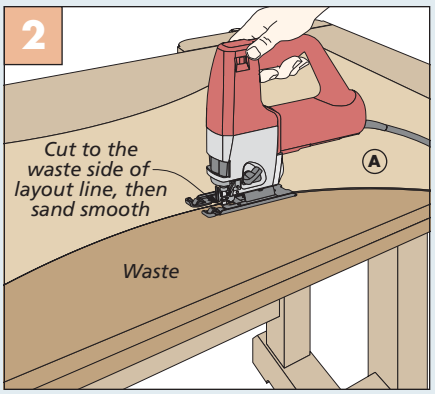

Cut the Arc. Use a jig saw and a sharp blade and cut to the waste side of the layout line. Then sand the arc smooth.

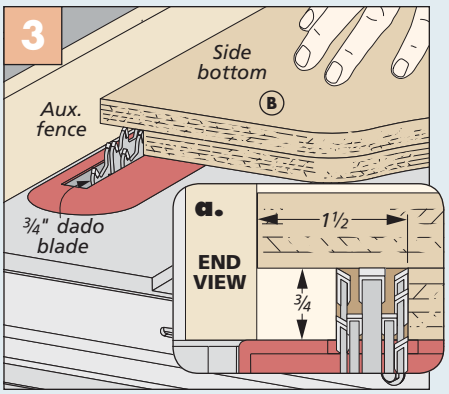

Rabbet in the Sides. The rabbet in the sides are easily done at the table saw with an auxiliary fence.

drawing on the previous page that this arc is tighter than the arc on the bottom piece. With that done, I moved back over to the table saw and cut some rabbets along the bottom edge (Figure 3).

SIDE WORK. At the upper end of the sides, there's some work to do to accommodate the top that's made later. As you can see in the main drawing on the previous page, there are three holes you need to drill in both side pieces. First, near the outer edges, there are two oversized through holes for studded knobs that lock the top in place.

The other hole is a centered, stopped hole that houses a threaded insert that ties the top to the base assembly. You want that hole, and the insert that it holds (detail 'a' previous page), to be square in the sides of the base. I used the drill press for this operation (Figure 4). To finish up the base, I attached the sides to the bottom with screws (detail 'b' on the previous page) and turned my attention to one more assembly.

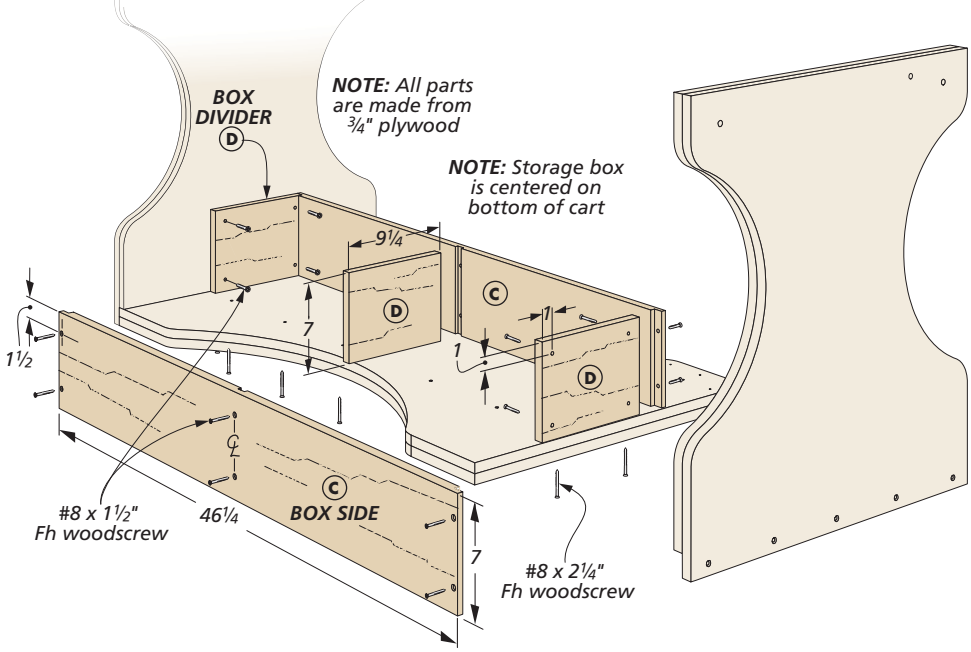

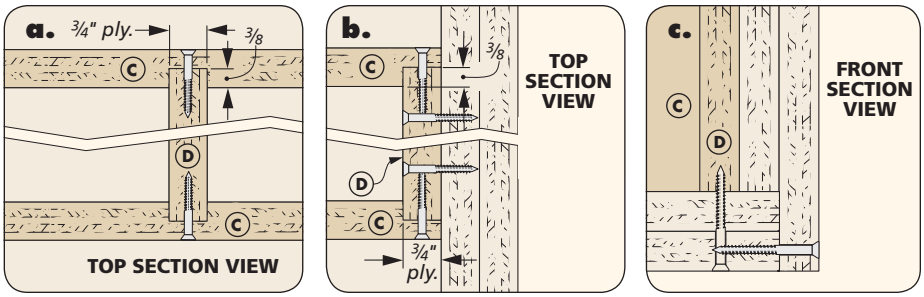

BUILD STORAGE BOX

It's nice to have a place close at hand to store the clamps, hold-downs, and other accessories that are needed at a bench like this. So I added the storage box you see in the main drawing above. But this storage box serves another purpose, as well. Once it's screwed in place to the bottom and sides (details 'b' and 'c'), it adds rigidity to the base assembly.

After sizing all the parts, I cut the dadoes and rabbets in the box sides to hold the dividers (Figures 5 and 6). Assembling the box with screws is the next order of business (details 'a' and 'b'). The final step to the building phase of the base assembly is to attach the storage box up through the bottom and into the sides. The main drawing above shows how this is done.

FINISH THE BASE. To complete the base assembly, I started with a light sanding, knocking down any sharp edges. I didn't use any stain on this project, so all that was left was to spray two coats of lacquer. Then on to making the top.

How-To: FINISH THE SIDES & JOINERY FOR THE STORAGE BOX

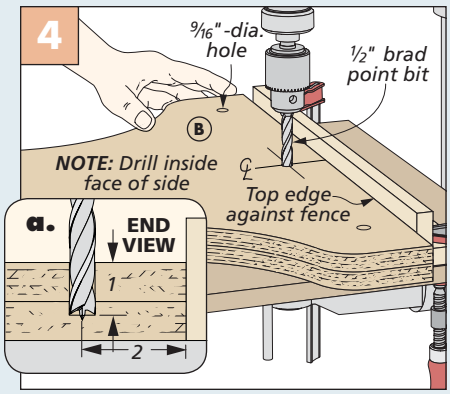

Drill the Pivot Hole. After drilling the through holes in the sides, change the bit and drill the stopped pivot hole.

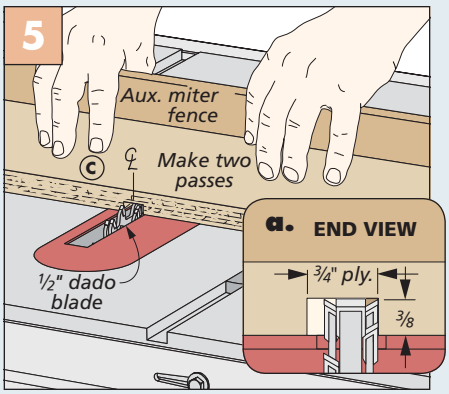

Storage Box Dado. The dado for the center divider is made with an auxiliary fence attached to your miter gauge.

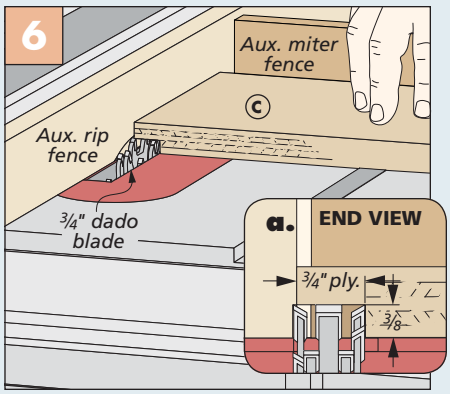

Storage Box Rabbets. To get the exact width needed for the dividers, bury the dado blade in an auxiliary rip fence.

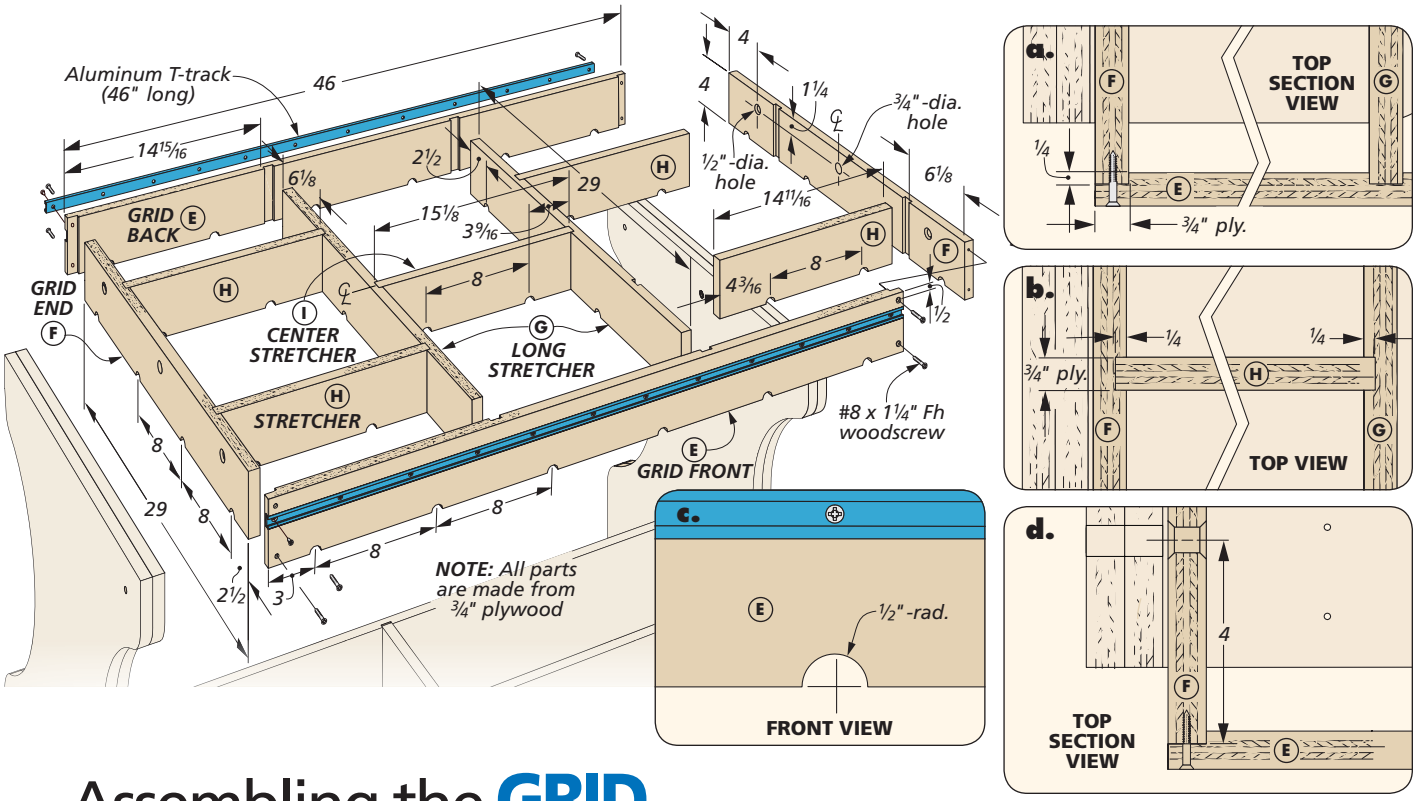

Assembling the GRID

With the base assembly off in the corner, it's time to focus on the top assembly. The top is unique in that you can use each side for different tasks in the shop. This works because the whole assembly rotates on a pair of bolts that are fastened to the threaded inserts that you installed in the sides earlier.

One side of the top assembly is a clamping grid. It features an open framework with a series of half-circles to cradle pipe clamps. The other side is a sandwich of two pieces of plywood with a plastic laminate top. (More on that later.) The T-tracks that are installed in the front and back sides of the grid provide even more clamping options.

GRID FIRST. The grid is the foundation for the top, so that's where I started building. After cutting all the pieces of the grid to their final size and laying out the location of the half circles, I moved over to the drill press to make the half circles that will cradle the pipe clamps.

The easiest way to make these notches is to clamp matching pairs of the grid together and drill the seam (Figure 1). This works for all the grid parts except the single center stretcher. I made a sacrificial board to clamp to that workpiece.

How-To: CREATE THE GRID PIECES

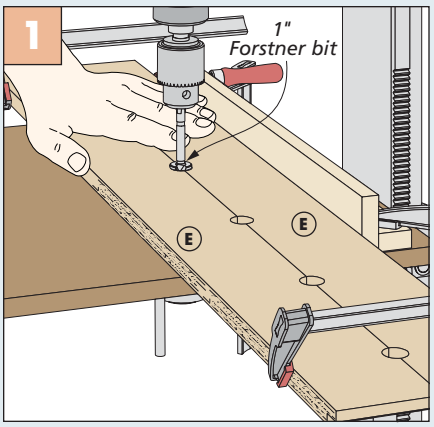

Notches in Grid. Clamp matching halves together to make the half circle notches in the grid pieces.

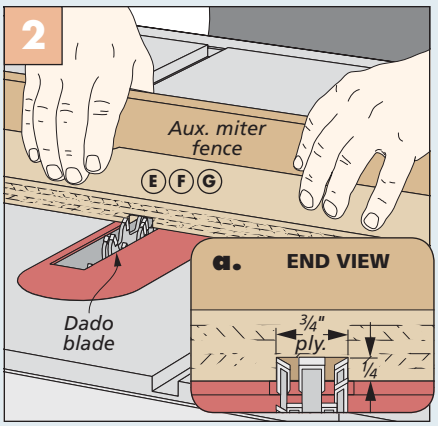

Cutting Dadoes. Using an auxiliary miter fence, cut the dadoes in the front, back, ends, and long stretchers.

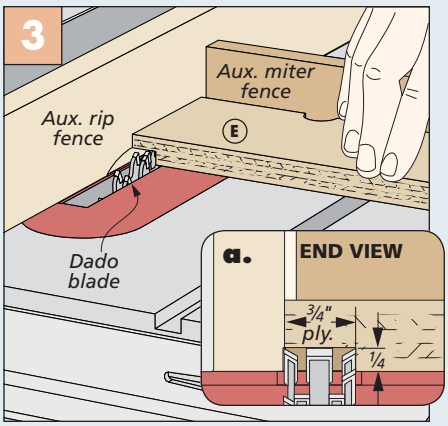

Cutting Rabbets. The ends of the grid front and back have a rabbet that mates with the grid ends.

GRID JOINERY. Taking all the grid parts over to the table saw, I started the joinery work. First up is cutting the dadoes needed in the front, back, ends, and long stretchers. Figure 2 shows this. The rabbet in the sides is next (Figure 3).

T-TRACK GROOVES. Speaking of the grid front and back, the next job is to cut a groove in these pieces to hold a length of T-track. Figure 4 shows you how. All that's left before gluing up the grid is to drill some holes in the grid ends.

HOLES. The grid end pieces have a set of holes similar to the ones you drilled in the sides of the base assembly. The large center hole that's drilled in Figure 5 will hold a bushing for the pivot bolt that ties the top to the base assembly. The other two holes that you see being drilled in Figure 6 are for the inserts that the studded knobs thread into.

INSTALL THE INSERTS. Before putting the inserts in the end pieces, I chamfered the edges of the hole slightly. This keeps sawdust and debris away from the insert. Now you can install the inserts the same way you installed them in the base sides (details 'a' and 'c').

ASSEMBLE THE FRAME. Working on a flat surface, I applied glue to all the joints of the grid and clamped it up. Screws added at the corners secure the grid. When the glue is dry, you can install the T-tracks in the sides. After that, there's one more thing to do.

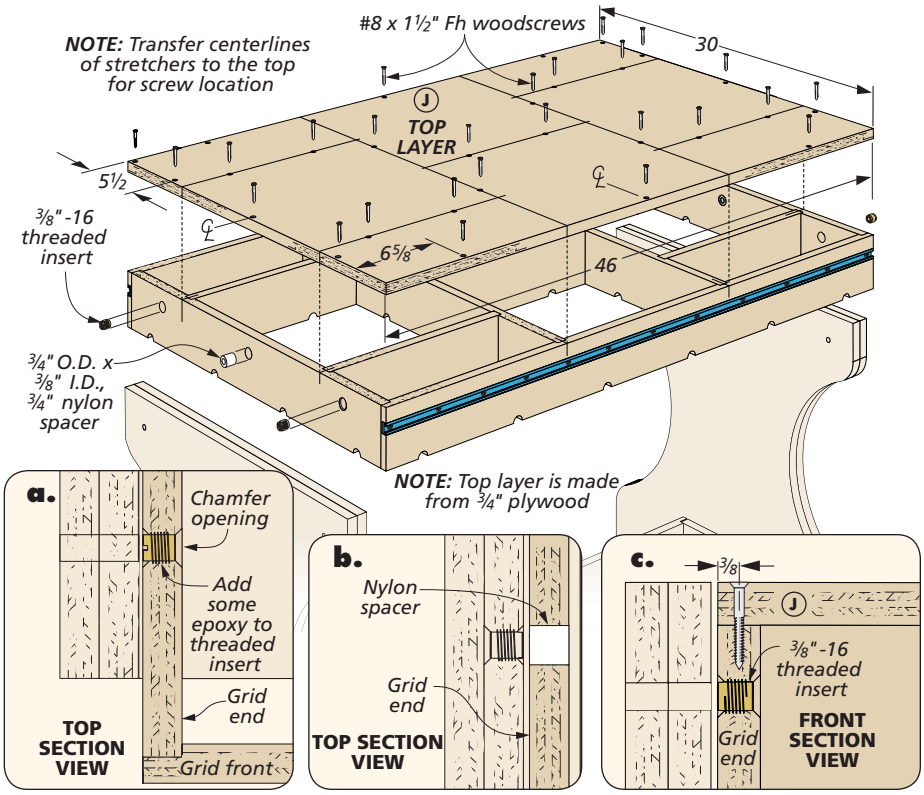

FIRST TOP LAYER

As I mentioned earlier, the top has two layers of plywood. As shown in the drawing above, the first layer is fastened to the grid with glue and screws. The upper layer (and the plastic laminate), has a lot of routing and drilling done to it. To avoid hitting any screws with a router bit, I'm going to glue that layer in place when the time comes.

Before attaching the first layer however, I marked the center locations of the stretchers on the faces of the grid front, back, and ends.

After attaching the top at the perimeter, transfer the marks to the top and install the rest of the screws. You can see how this will look in the main drawing above. Next up is finishing what you've started on this side of the top.

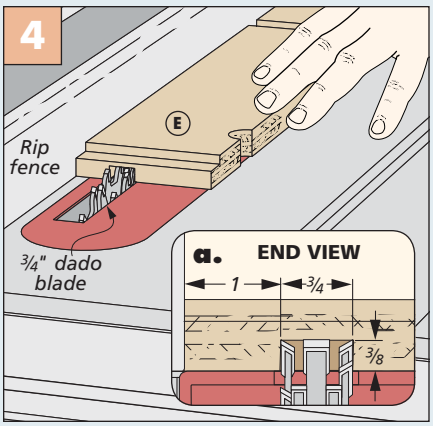

Groove for T-track. Use the rip fence to guide the grid front and back pieces while cutting the groove for the T-track.

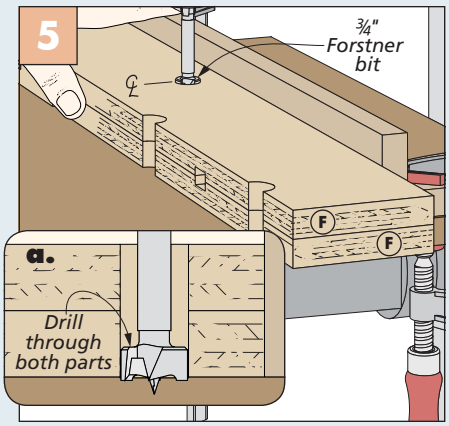

Hole For Pivot Bolt. Stack the grid end pieces to ensure that the pivot holes line up in both pieces.

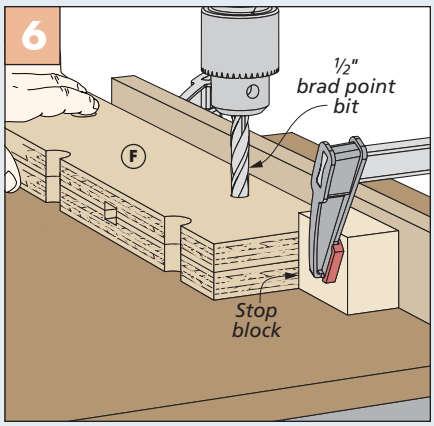

Inserts. A stop block clamped to the drill press fence positions the insert holes the right distance from the ends.

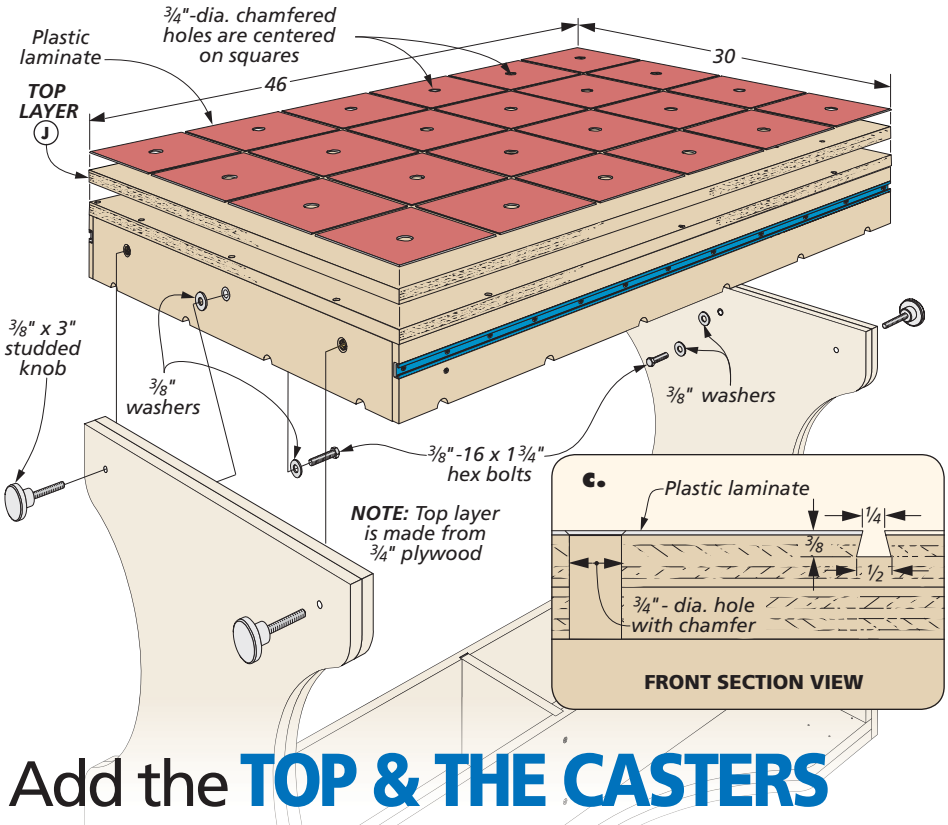

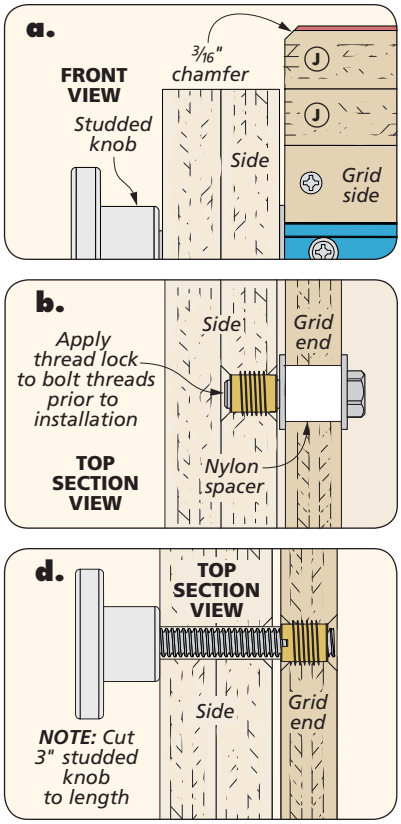

Add the TOP & THE CASTERS

With the first layer of the top installed on the grid, I turned my attention to the remaining steps that complete this side of the worksurface. If you glance at the main drawing above, you'll see it begins with another layer of plywood, followed by a layer of plastic laminate.

To finish up the surface, I machined a grid of dovetail grooves for the *Match-fit* hold-downs that I mentioned earlier. Follow this up by drilling dog holes centered within each square. This will give you maximum clamping options.

PLYWOOD TOP. Since the top is going to have a lot of routing and drilling done to it, I decided to avoid screws and use glue to attach it to the first layer. As you know, gluing large surfaces can be a slippery affair, and this case was no exception. The remedy was to make the top slightly oversized then flush trim it with a router, as Figure 1 shows.

LAMINATE. I like plastic laminate mainly because of its durability. Although working with contact cement and the tools needed to do a successful laminate installation is a bit of a tangent from a normal shop routine, the low maintenance virtues of the product makes it worth the effort.

As I described earlier, there's going to be a lot of routing and drilling on this top. To ensure the laminate stays put, I

How-To: ASSEMBLE THE TOP

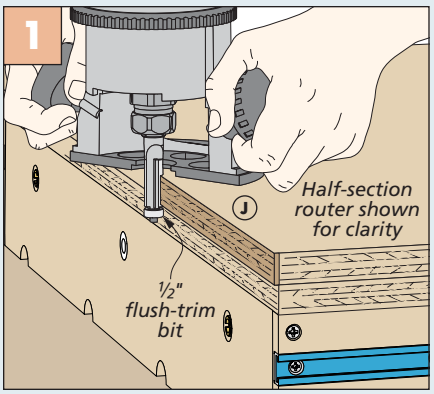

Trim Top to Size. After the glue dries between the layers of the top, use a flush-trim bit to trim the top to size.

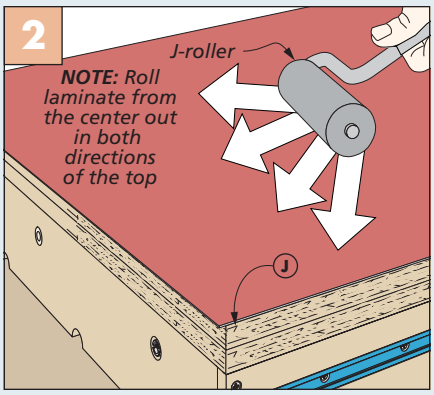

Attach Laminate to Top. To firmly adhere the laminate to the top, use a J-roller, pressing from the center out.

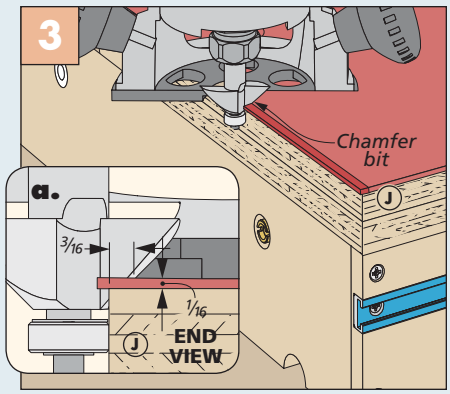

Chamfer the Edge. A chamfer bit eases all the edges of the top. File any remaining sharp edges.

applied several coats of contact cement to both surfaces of an oversized piece. Then I went over the top in multiple directions with a J-roller (Figure 2). I eased the edges of the top with a chamfer bit, as Figure 3 shows.

HOLD-DOWN GROOVES. To create the dovetailed grooves in the top, I started by laying out the centers of the grooves in both directions across the top. The grooves are created in two passes, using two separate routers. (If you don't have a second router, you can do one groove at a time, switching bits, and completing each groove as you go.)

The first pass is done with a straight bit and a fence clamped to the table to remove the bulk of the waste (Figure 4). The second pass completes the profile and is done with the second router and a dovetail bit (Figure 5).

DOG HOLES. Next up is making the dog holes. Figure 6 shows how to do this. Notice in Figure 6a that I placed the top on a series of blocks taller than the grid when drilling these holes. This is to prevent blowout when the drill bit breaks through the grid side of the top. I swept away the shavings from that process and chamfered each of the holes on the laminate side of the top. Before attaching the top to the base, I added some casters.

INSTALL CASTERS. The large locking casters you see to the right are ideal for this project. To install them, I flipped the base assembly over and drilled pilot holes to install the large panhead screws that hold them in place. All that's left is to bolt the top in place.

ATTACH THE TOP. With the nylon spacers placed in the holes in the top, take a moment to spread some thread lock on the threads of the mounting bolts. Have a friend help align the holes in the top to the threaded inserts in the base assembly, then install the pivot bolts (detail 'b' previous page).

The studded knobs that you see in the main drawing on the previous page, and in detail 'd' are fed through the holes in the sides and lock the top in place. These knobs came longer than needed from the supplier. I cut the threads to a more manageable length. With that, the clamping station is fully operational and a great addition to any shop. W

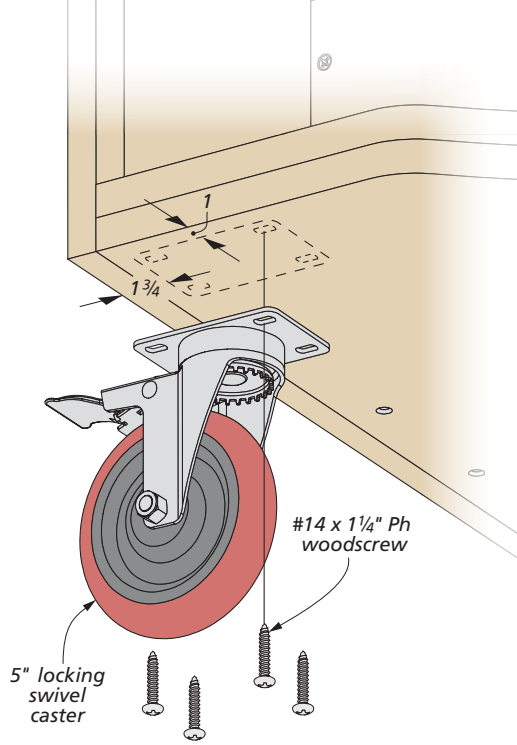

Materials & Supplies

A	Bottom (1)	1 1/2 ply. - 26 x 47 3/4
B	Sides (2)	1 1/2 ply. - 26 x 29 1/2
C	Box Sides (2)	3/4 ply. - 7 x 46 1/4
D	Box Dividers (3)	3/4 ply. - 7 x 9 1/4
E	Grid Sides (2)	3/4 ply. - 4 x 46
F	Grid Front / Back (2)	3/4 ply. - 4 x 29
G	Long Stretchers (2)	3/4 ply. - 4 x 29
H	Stretchers (4)	3/4 ply. - 4 x 14 11/16
I	Center Stretcher (1)	3/4 ply. - 4 x 15 1/8
J	Top Layers (2)	3/4 ply. - 30 x 46

- (8) #8 x 1 1/4" Fh Woodscrews
- (48) #8 x 1 1/2" Fh Woodscrews
- (24) #8 x 2 1/4" Fh Woodscrews
- (28) #6 x 3/8" Fh Woodscrews
- (16) #14 x 1 1/4" Ph Woodscrews
- (2) 48" T-Track
- (6) 3/8"-16 Threaded Inserts
- (2) 3/4" O.D. x 3/8" I.D.- 3/4" Nylon Spacers
- (4) 3/8" x 3" Studded Knobs
- (4) 3/8" Washers
- (2) 3/8"-16 x 1 1/2" Hex Bolts
- (4) 5" Locking Swivel Casters
- (1) 48" x 48" Plastic Laminate

ALSO NEEDED: *Five 48" x 96" sheets of 3/4" Baltic birch plywood*

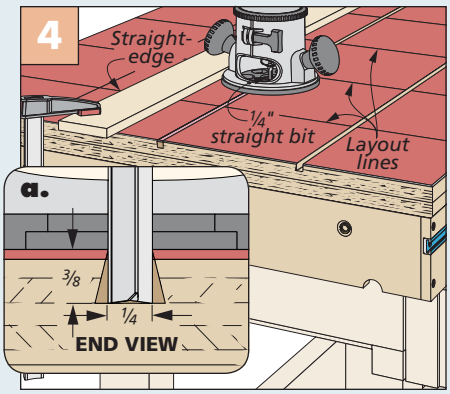

Rough Pass First. With a fence and a straight bit, make the first pass to remove the majority of the waste.

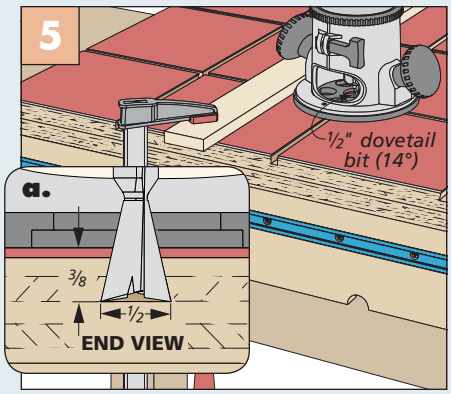

Dovetail Profile. On the second pass, use a 14° dovetail bit to create the profile to match the *Matchfit* clamp.

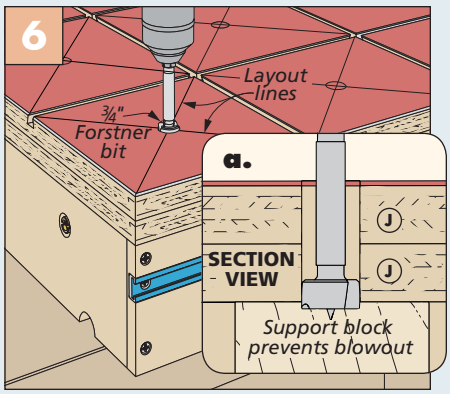

Dog Holes. When drilling the dog holes, place a support block underneath the hole locations to prevent blowout.

Heirloom Project

Barn-door Cabinet

Sliding, "barn-door" style hardware is all the rage in interior design. Here, we shrink the concept for use in this rustic-looking cabinet.

Take a walk down the hardware aisle at your local home improvement store and you're likely to come across several barn-door style mounting systems in various shapes and sizes. Their popularity for mounting interior doors has surged in the last several years.

One of our designers took that idea and ran with it when designing the cabinet shown here. Instead of using commercially available hardware that, let's face it, isn't exactly inexpensive, we came up with a shop-made version that's easy to make using commonly available parts. The result is a charming addition to an already stunning cabinet.

ABOUT THAT CABINET. In order to match the rustic appeal of the hardware, the cabinet itself gets treated with a glazing and distressing process that gives it a well-worn look. If you'd like to replicate our cabinet, you can find more about the finishing technique in our online video found at *Woodsmith.com*.

Beyond the clever hardware and paint, the true beauty of this cabinet lies in its versatility. It would be equally at home in a family room serving as an entertainment center or in a large kitchen to provide extra storage space. Or it could serve as a dining room sideboard, as we show above. The eight spacious drawers and center shelves will hold all of your place settings and dishes. So turn the page to get started on this stylish piece of furniture.

Written by: Robert Kemp; Project design: John Doyle

Construction Overview / OVERALL DIMENSIONS: 72"W x 31⅞"H x 21"D

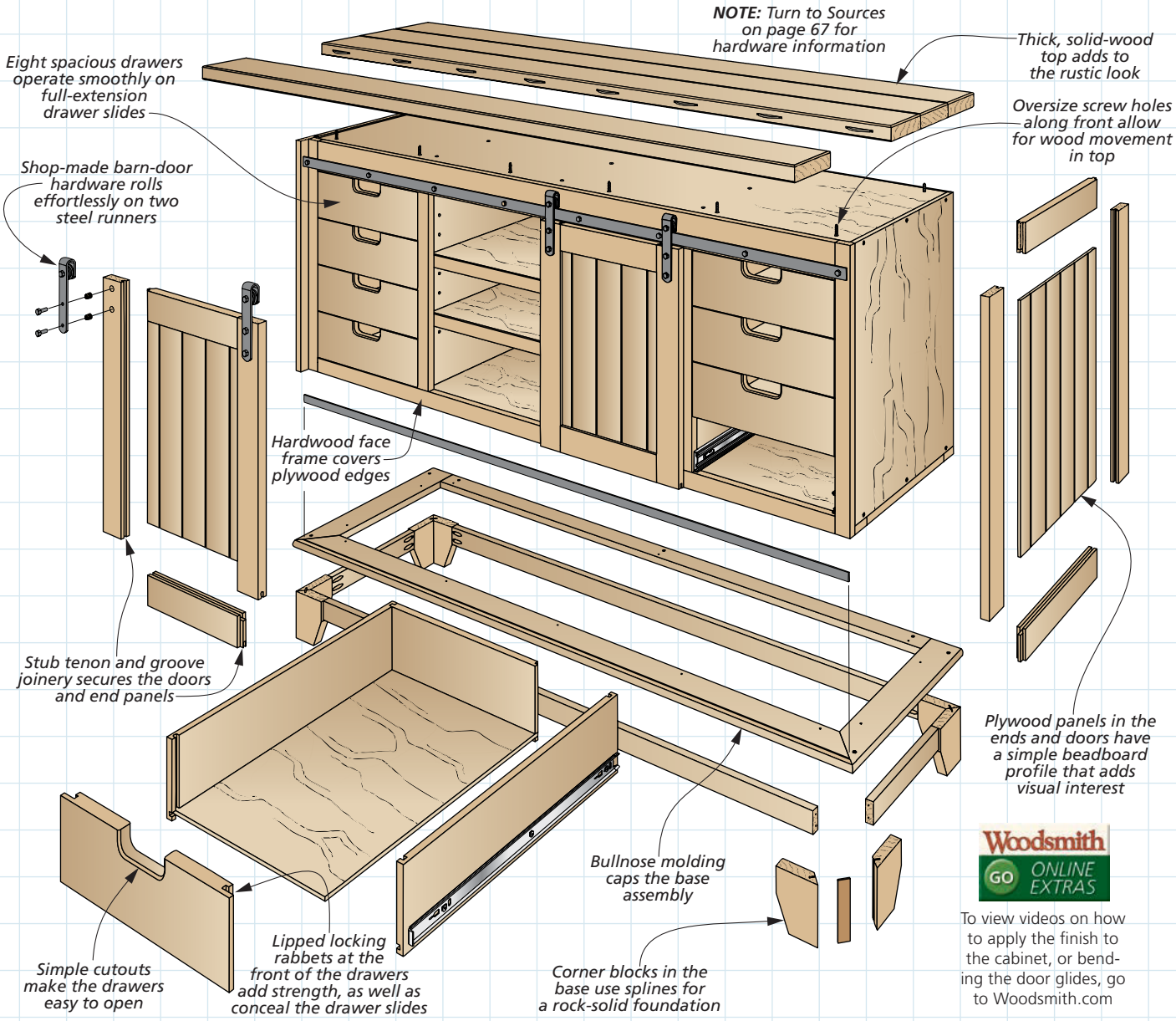

Woodsmith GO ONLINE EXTRAS

To view videos on how to apply the finish to the cabinet, or bending the door glides, go to Woodsmith.com

▲ The shop-made barn-door hardware glides on a simple steel track mounted above the doors. A couple of coats of black spray paint match the hardware to the finish on the cabinet.

▲ The two sliding doors can be positioned in front of the drawers to display items on the center shelves, or slid to the middle of the cabinet to access the drawers.

Illustrations: Dirk Ver Steeg

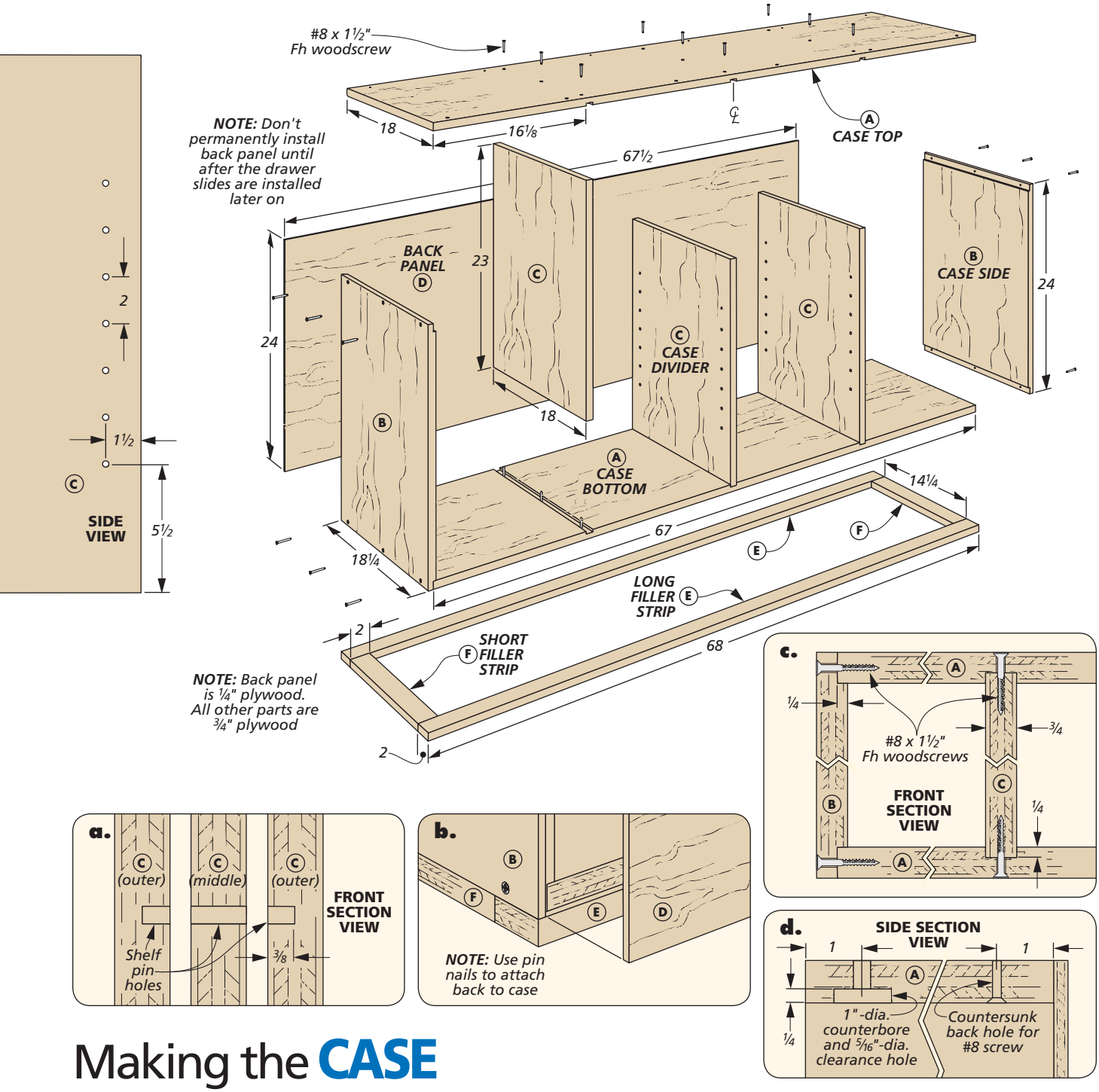

Making the CASE

At the heart of the barn-door cabinet is a plywood case that acts as the foundation for the entire project. For the bulk of this construction, I used simple, but strong, dado and rabbet joinery. Adding some strategically placed screws during assembly allows you to keep the build process moving right along.

But before getting too far ahead, just a quick mention of the material I used for the case. Since all of the case parts are either covered up later or painted, there's no point in using premium plywood here. I opted for inexpensive birch plywood for this section. It takes paint well and is typically void-free.

And one other note before getting started. I had in mind that my barn-door cabinet would be used in a dining room. But if you're building it to use as an entertainment center, you may want to measure the electronic equipment you want to place on the shelves to ensure it fits. It's better to make any necessary modifications now before you start cutting out parts.

EFFICIENT LAYOUT. I began the case by cutting all of the parts (besides the back panel and filler strips) to the final sizes shown above. Cutting them all up front lets you position them on your plywood sheets in order to make the most efficient use of your material.

Be sure to notice that the case sides are slightly wider than the other parts. This extra width provides the room for a rabbet that the back panel fits into later on, as shown in detail 'b' on the previous page.

DADO ALIGNMENT. With the main case parts in hand, the next order of business is to cut the dadoes in the case top and bottom. These dadoes hold the case dividers and need to be aligned with one another. To guarantee proper positioning, I clamped the case top and bottom edge-to-edge and made the simple straightedge guide shown in Figure 1 at right.

This straightedge guide is nothing more than a strip of hardboard with a narrow piece of hardwood attached on top to act as a fence. With the router bit you intend to use to make the dadoes loaded in your router, run the edge of the router base along the hardwood fence to trim the hardboard base to size.

Now you can simply line up the edge of the guide with your layout marks and clamp it in position. I opted to use a ½"-diameter straight bit for my dadoes. This allowed me to cut the dadoes in two passes, sneaking up on the final width (Figure 1a).

NOW RABBETS. The rest of the joinery for the case can be finished up at the table saw. The rabbets at the top and bottom of the case sides (Figure 2) and the rabbets along their back edge (Figure 3) can be turned out in short order.

How-To: CUT THE CASE JOINERY

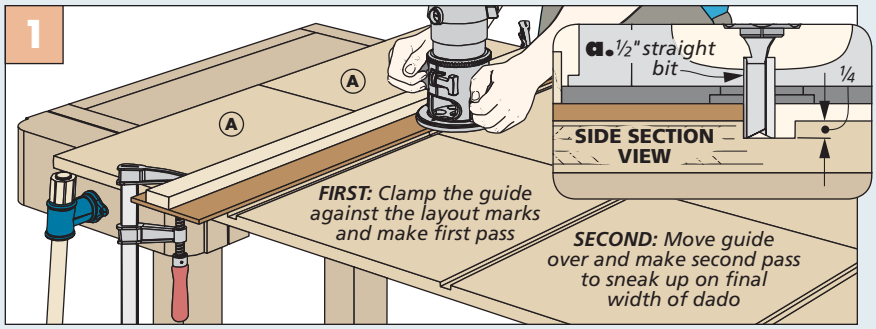

Straightedge Guide for Routing Dadoes. This straightedge guide is easy to build and simple to position for routing the dadoes. By clamping the case top and bottom edge-to-edge, you'll be sure the dadoes line up perfectly.

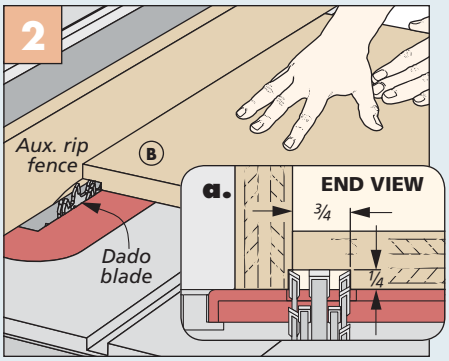

Rabbet Case Sides. Form the rabbets on the case sides using a dado blade and auxiliary rip fence.

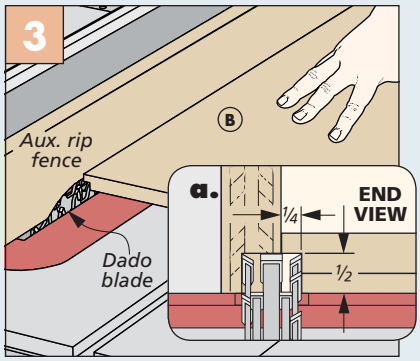

Rabbet for Back Panel. Raise the blade and reposition the fence for the rabbet along the back edge.

DRILLING HOLES. To ease the process of drilling the multiple holes in the dividers for shelf pins, I made a hardboard template, as shown in the box below. Notice that you'll drill through holes in the middle divider and stopped holes in the two outer dividers. Detail 'a' on the previous page shows what I mean.

I also drilled the mounting holes in the underside of the case top for attaching a solid wood top later on. You'll notice in detail 'd' on the previous page that the holes drilled along the front edge have oversized counterbores. This will allow room for the top to expand and contract.

At this point, I clamped my parts together for a quick test fit. I also measured the opening for the back panel and cut it to size. Now assemble the case with glue and screws. Use the back panel to keep everything square, but don't fasten it in place just yet.

Finally, cut the filler strips to size and glue them to the bottom of the case. The long filler strips overhang the edge of the bottom in the rear to create a rabbet for the back panel (detail 'b').

How-To: DRILL THE SHELF PIN HOLES

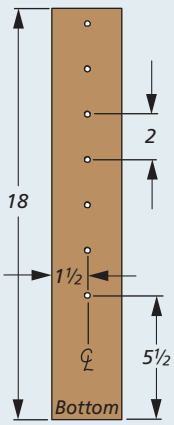

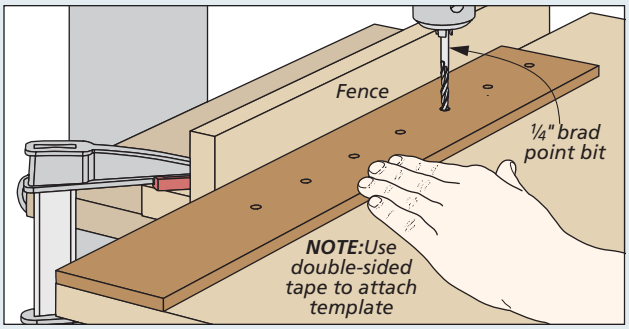

Shelf Pin Holes. Use a template attached to the dividers with double-sided tape to drill the shelf pin holes. The holes in the middle divider are through holes.

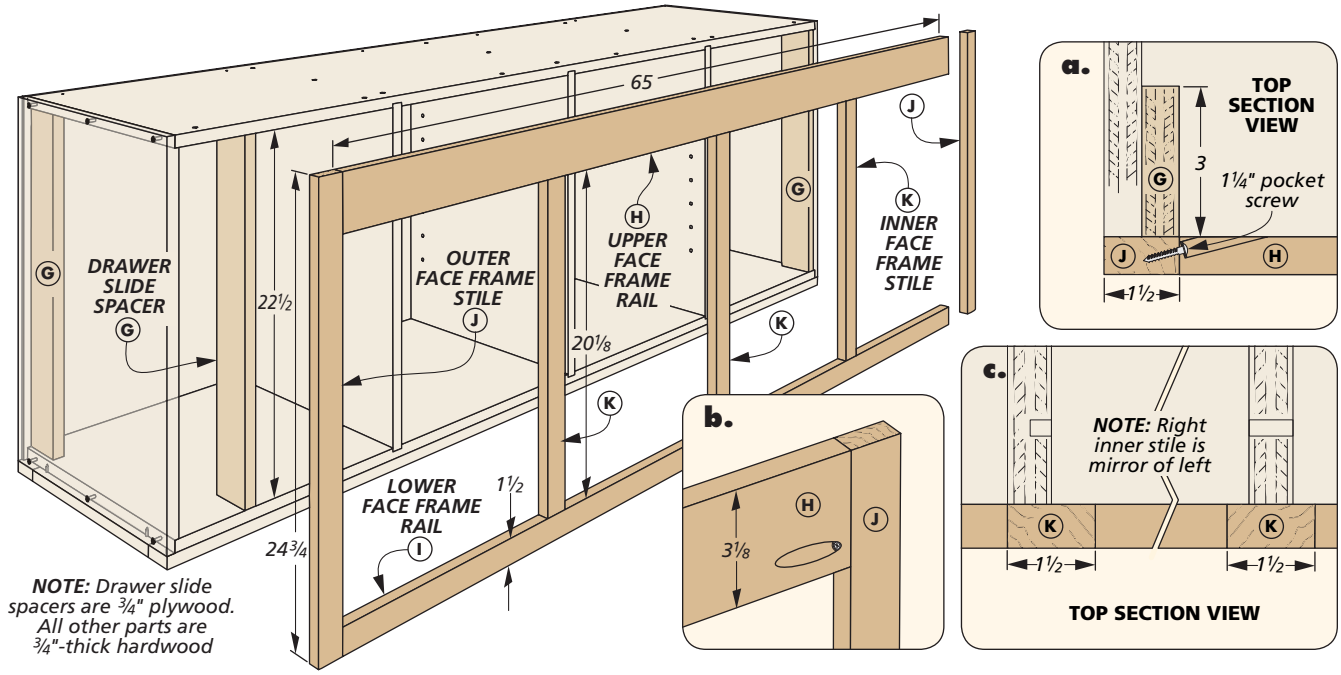

Adding the FACE FRAME & BASE

The basic plywood case provides a solid framework for the cabinet. Now it's just a matter of building it up by adding the face frame to cover the plywood edges and the base to raise the cabinet. But before starting on the face frame, I glued the four drawer slide spacers in place as shown in the drawing and detail 'a' above.

ADD THE FACE FRAME. There's nothing complicated about adding the face frame to the case either. I began by cutting the two outer stiles to size and gluing them in position, flush with the outside edge of the case. The upper and lower rails can then be cut to fit between the stiles. Be sure to note that the upper rail is wider than the lower rail to make room for adding the door hardware later on. Because of this extra width in the upper rail, I added a pocket screw at each end along the lower edge to keep the face flush with the stiles (details 'a' and 'b'). The three inner stiles wrap up the frame. Detail 'c' shows the proper alignment of these parts.

ASSEMBLE THE BASE

As the drawing on the next page shows, the base assembly consists of mitered corner blocks connected by four rails. The molding fastened to the top of the rails has a bullnose profile along the edge, as shown in detail 'c' on the next page. The front piece also houses the lower runner that acts as the door track. You'll cut the kerf for this runner after making the molding.

CORNER BLOCKS. The How-To box below shows the steps involved in making

How-To: BUILD THE BASE PARTS

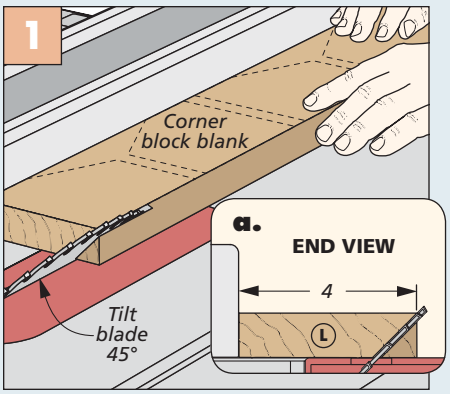

Oversized Blank. Start with a long blank and miter one edge to establish the corner of each block.

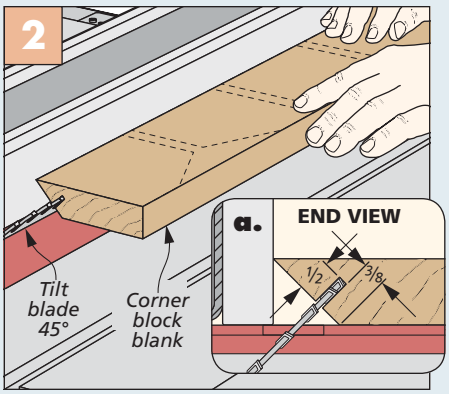

Spline Kerf. With the blade still tilted 45°, make the shallow cut on the mitered edge for the spline.

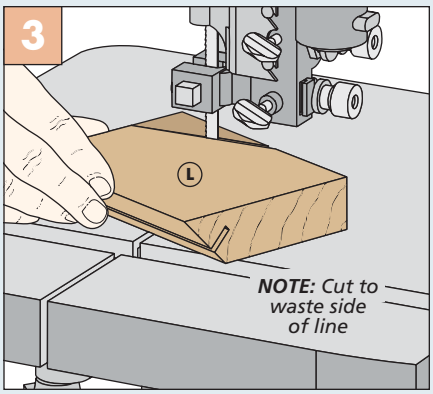

Tapered Profile. Head over to the band saw to taper the inside edge of each block. Sand them smooth when done.

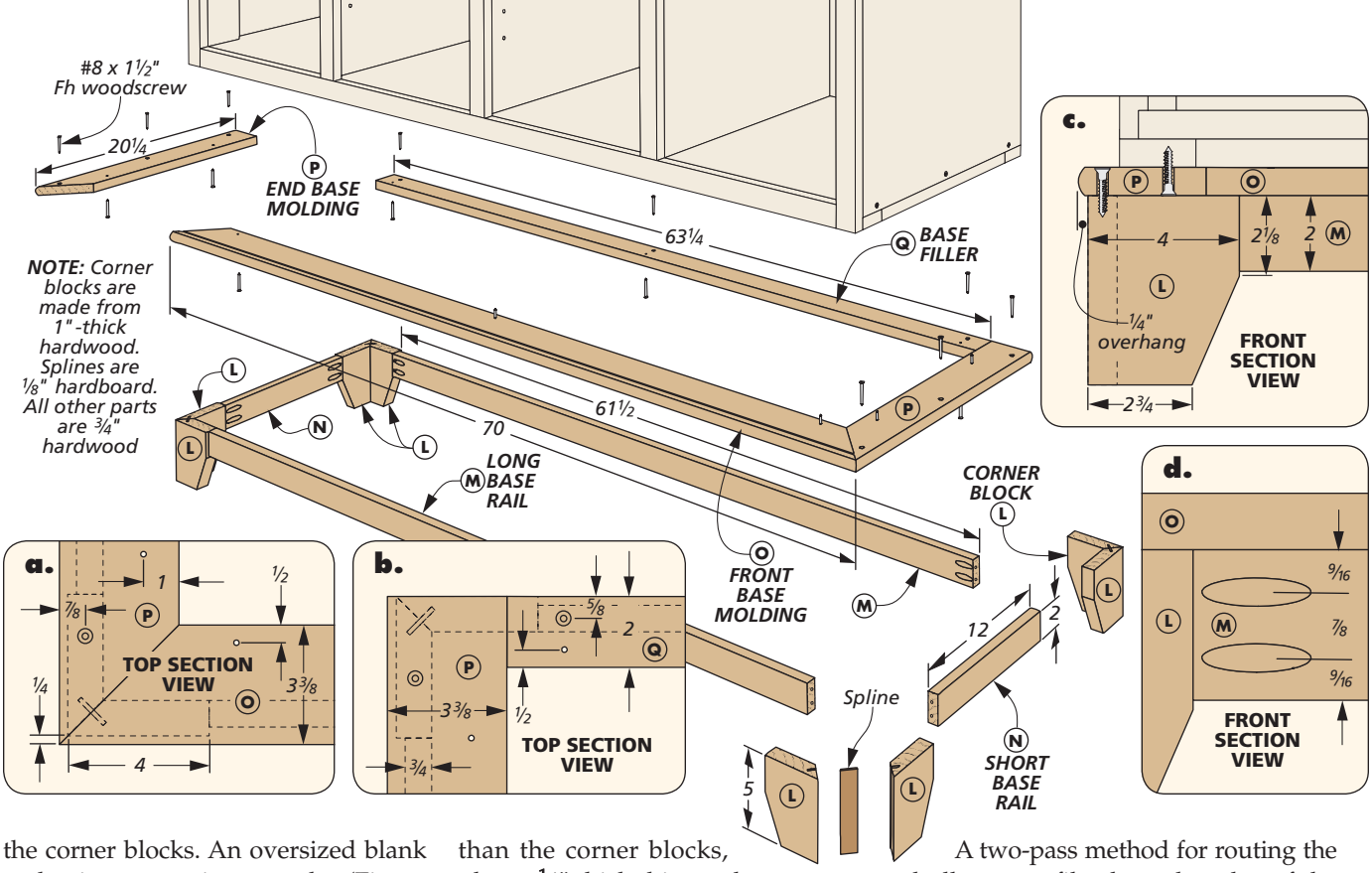

the corner blocks. An oversized blank makes it easy to miter one edge (Figure 1) and cut the slot along that edge for a spline (Figure 2). Then it's just a matter of cutting the blocks to size and tapering the inside edge at the band saw, as shown in Figure 3.

After cutting the splines to size from hardboard, glue the four corner block assemblies together. To add the rails to the corner block assemblies, I used pocket screws on the back side. Because the rails are made from thinner stock than the corner blocks, place a ¼"-thick shim under the rail when attaching the parts (Figure 4). This difference in material thickness creates a shadow line when assembled.

BULLNOSE MOLDING. Now cut the three pieces for the base molding to size, but leave the ends square at this point. Head over to the table saw and make the shallow groove along the top of the front molding (Figure 5). This groove houses the steel bar that acts as the door runner. You'll install the runner later on.

A two-pass method for routing the bullnose profile along the edge of the front and end moldings is shown in Figure 6, below. After that, miter the ends of the moldings to achieve the overhang shown in detail 'c' above. To avoid screw heads showing, be sure to only use glue to attach the front molding to the rail. The other molding pieces (and the filler) can be attached using glue and screws. The whole base assembly can then be positioned and held to the bottom of the case with glue and screws.

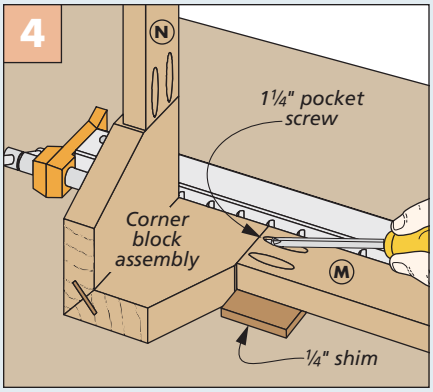

Shim the Rails. Use a ¼"-thick shim to support the rails when attaching them to the corner block assemblies.

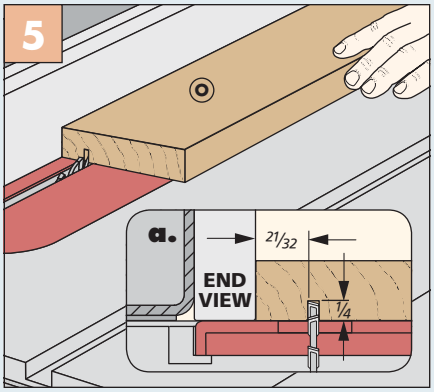

Door Runner Groove. The groove that holds the steel door runner can run from end-to-end of the front molding.

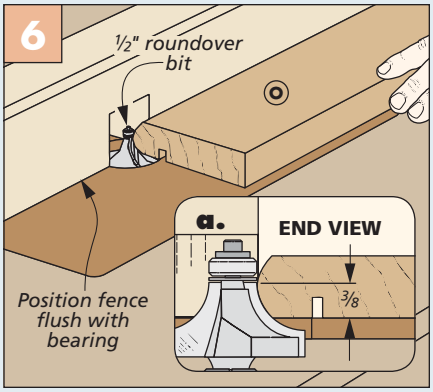

Bullnose. Set the bit height as shown in detail 'a' and make two passes to form the profile on the molding.

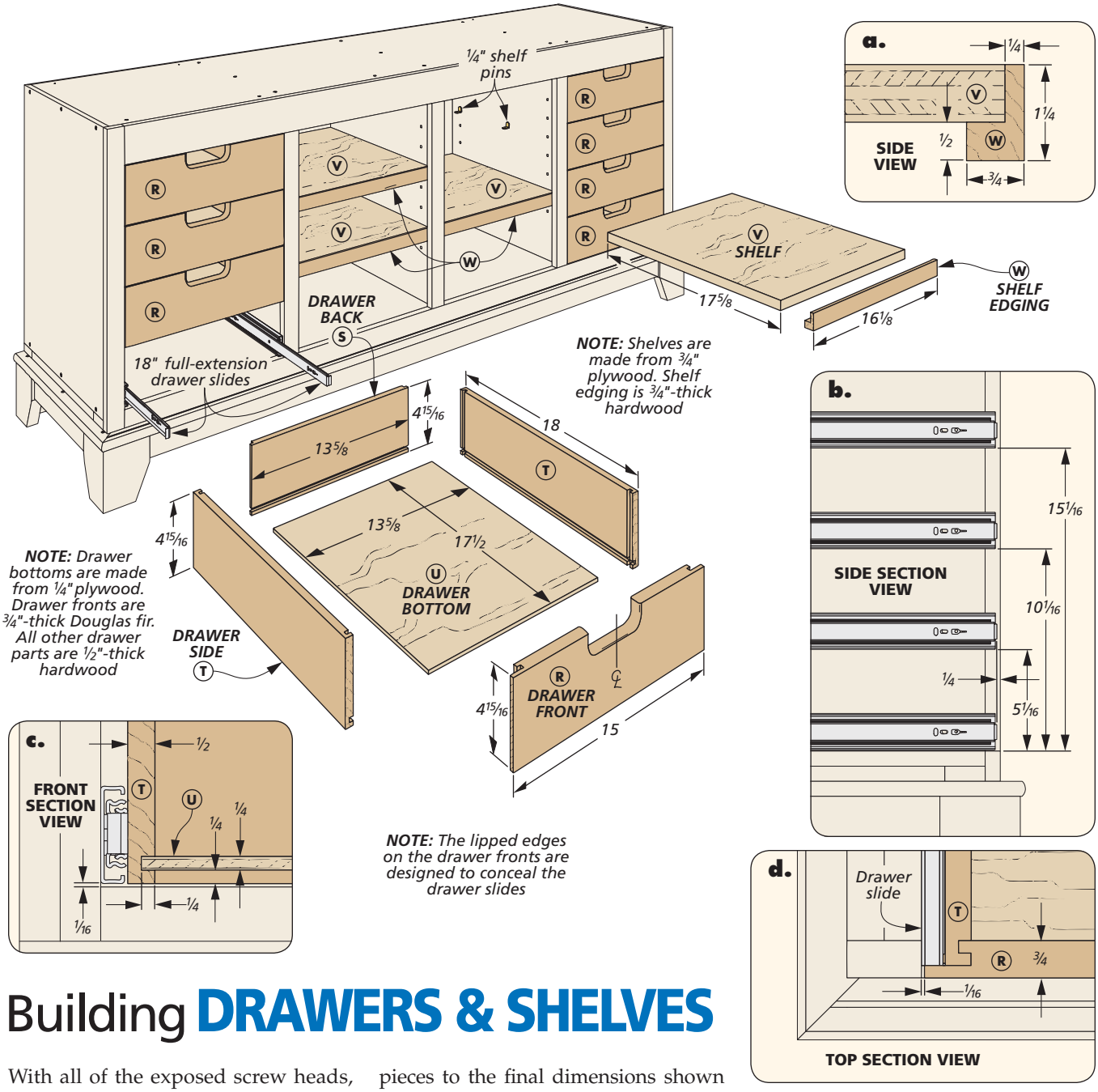

Building DRAWERS & SHELVES

With all of the exposed screw heads, the outside of the case may look more utilitarian than like a quality piece of furniture. But that'll be remedied soon enough with the addition of the side panels and the solid wood top.

For now though, you can concentrate on finishing up the interior of the case by adding the eight drawers and the four shelves in the center. I started by building and installing all of the drawers.

DRAWER FRONTS FIRST. Since there are eight drawers needed for the cabinet, I wanted to be as efficient as possible when building them. I started by cutting all of the fronts, backs, and side pieces to the final dimensions shown above. Be sure to note that the drawer fronts are thicker than the sides and backs, and are made from the same species (Douglas fir) that you'll use for the top later on. The sides and backs are made from a ½"-thick secondary wood (maple in this case).

Because I'm using full-extension drawer slides for smooth operation of the drawers, I made the drawer fronts with a lip along the edges to cover the drawer slides when the drawer is closed. Detail 'd' above shows what I mean. There's also an article on page 62 that delves a little further into drawer construction using locking rabbets, with or without lipped edges.

RABBET JOINERY. The first step in making the locking rabbet joint is to cut a deep, centered groove on both ends of the drawer fronts (Figure 1 on the next page). The depth of this groove is equal to the thickness of the drawer side pieces (½"), plus a shade under the ½"-thick drawer slide thickness. This will allow for the overlap, yet still leave a gap around the drawer front and face frame. Figure 1a shows the depth of the groove I made.

To complete the drawer front portion of the locking rabbet joint, you'll simply clip off part of the tongue on the inside face of the drawer front. Figure 2 at right provides the details. This creates the space for the drawer side to "lock" in place with the front.

DRAWER SIDE DADOES. With the same dado blade in the table saw, grab the drawer sides and cut the shallow dadoes along the inside edge at the front and rear (Figure 3). To see if the rip fence is positioned properly, cut a test piece first and check it with a drawer front to ensure a good fit, then cut all the rest of the side pieces.

While I still had a ¼"-wide dado blade in my saw, I cut the groove along the inside bottom edge on all of the drawer parts. This groove holds the plywood bottom.

DRAWER BACK RABBETS. Now, you'll want to switch to a wider dado for the next step. Here you need to cut a rabbet along the ends of the back pieces, as shown in Figure 4. The tongue formed fits into the dadoes you just cut near the rear of the sides.

HANDLE CUTOUT. One last thing you'll need to do before assembling the drawers is to make a handhold cutout in the drawer fronts. Figure 5 provides the details for this. The first step is to simply drill a hole at each corner to define the cutout. Then, remove the rest of the waste at the band saw. A little sanding finishes the job. Now cut the plywood bottoms to size and assemble the drawers.

Because there are quite a few full-extension drawer slides to install, I made a spacer from a piece of hardboard to simplify the process. Shop Notes on page 66 provides all the information you'll need for installing the drawer slides in the case using this spacer.

SHELVES & EDGING. To finish out the interior of the case, I added four adjustable shelves. The shelves are pieces of plywood with hardwood edging along the front to make them sturdy. Detail 'a' on the previous page and Figure 6 at right provide all the information you'll need for making the edging. The edging is simply glued and clamped to the front of the shelves.

How-To: CUT THE DRAWER & SHELF JOINERY

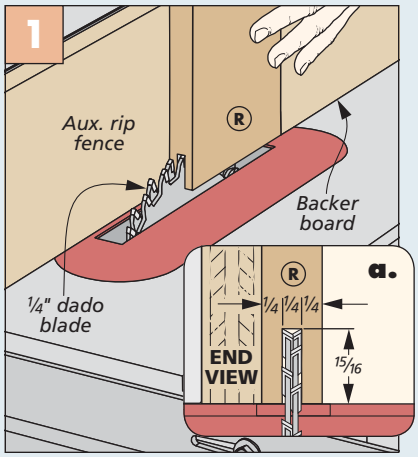

Deep Groove. Use a tall auxiliary rip fence to steady the workpiece when cutting the centered grooves.

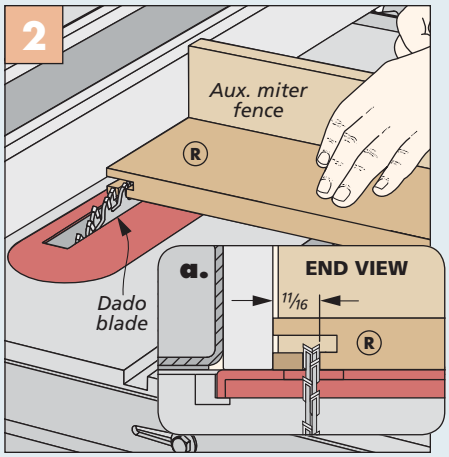

Clip the Tongue. Remove the tongue from the inside face of the drawer to complete the locking rabbet.

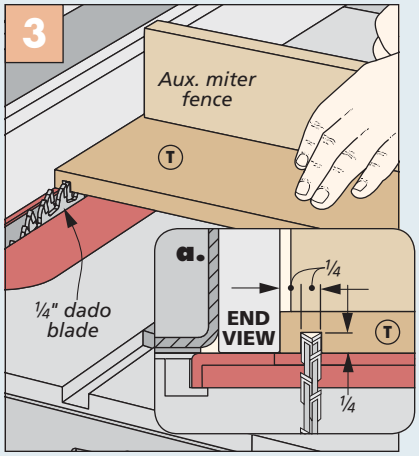

Dado Sides. Using the rip fence as a stop, cut the dadoes at the front and rear of the side pieces.

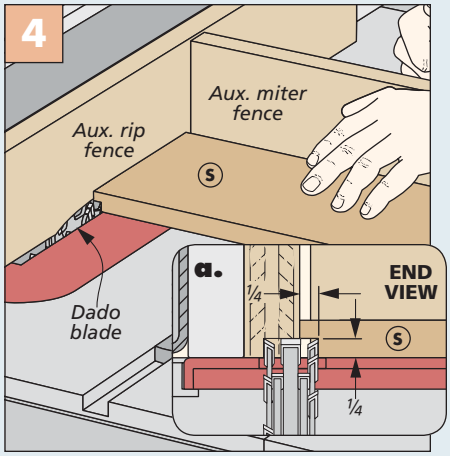

Rabbet Drawer Backs. Bury a wide dado blade in an auxiliary rip fence to form the tongues on the drawer backs.

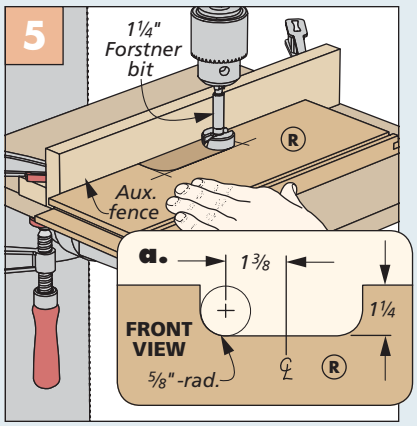

Handhold Cutout. Define the ends of the cutout at the drill press, then remove the waste at the band saw.

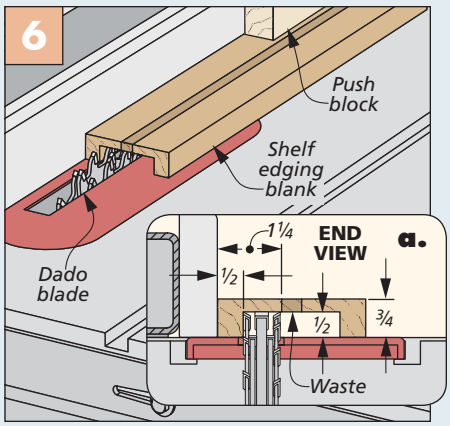

Shelf Edging. Make multiple pieces of edging from an oversize blank. Rip them apart after cutting the groove.

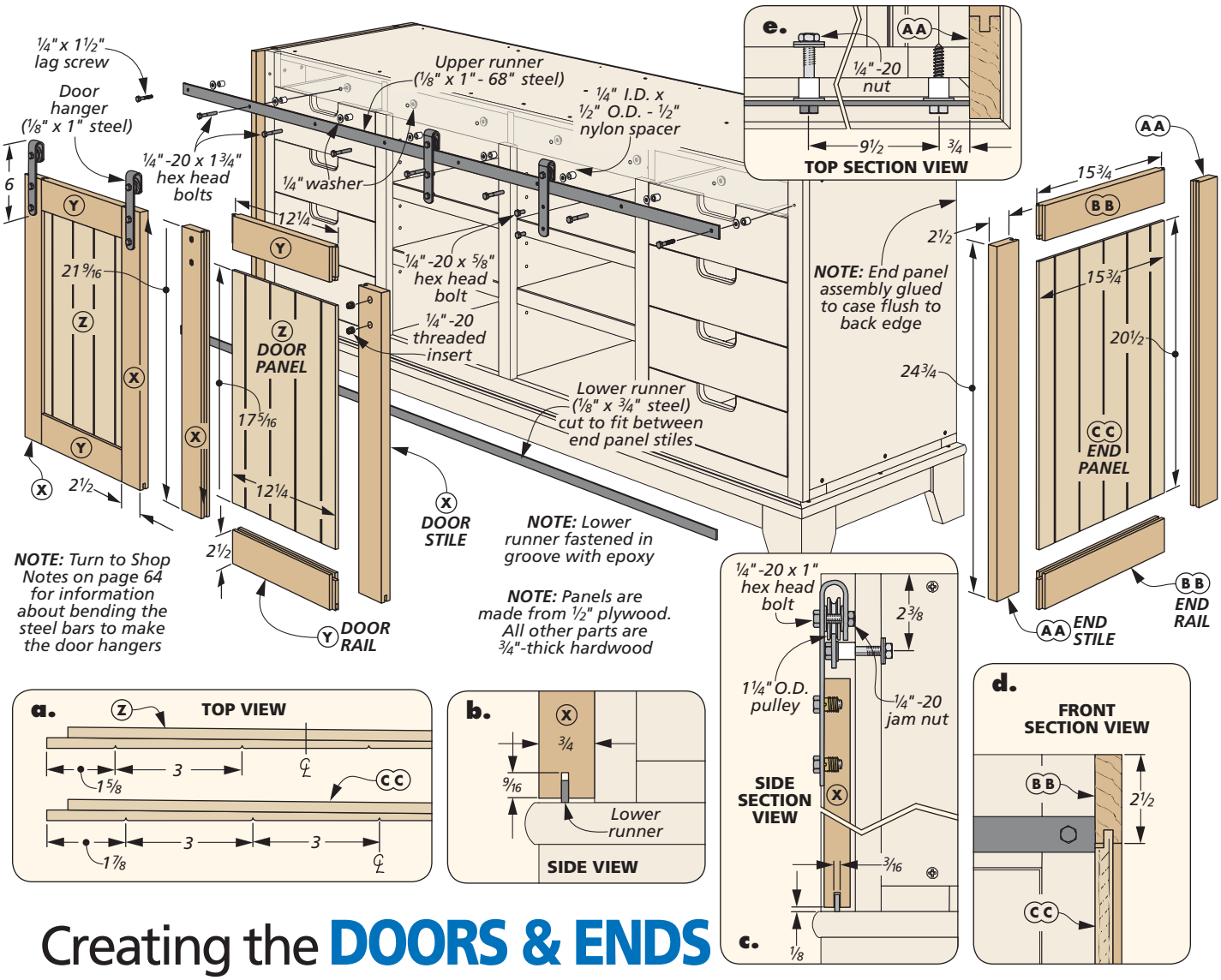

Creating the DOORS & ENDS

Now you'll start to add the elements that really give this cabinet its unique look. And that means it's time to button up the outside of the cabinet. You'll begin that process by building the end panel assemblies and the two doors using stub tenon and groove joinery.

While the end panels and the doors use the same joinery and building procedure, you'll notice that the end panel assemblies are slightly taller and wider than the doors. You'll need to keep that in mind as you cut the parts to size shortly.

After the doors are complete, they'll get mounted to the cabinet. Here, you'll do a little metalworking to create the barn-door brackets used to hang the doors and mount the steel bars that act as runners. And don't worry if you've never worked with metal before, there's a simple shop-made jig you'll use to bend the hanger brackets to shape. There's more information about this in Shop Notes on page 64.

ENDS & DOORS. Even though the doors and end assemblies are different sizes, I found it most efficient to build them at the same time. So cut the stiles and rails to size, keeping the size differences in mind. And label all the parts before moving on to the joinery.

STUB TENON & GROOVE. Cutting the stub tenon and groove joinery in the door parts is covered in Figures 1 and 2 on the next page. These are pretty straightforward cuts that you'll knock out in no time at the table saw.

GROOVED PANELS. The interior panels in the doors and end assemblies appear to be made from individual boards. But in fact, they're simply pieces of plywood with decorative grooves cut in the face. I'll explain how to get this look in a bit. But first, cut the panels to size and head back to the table saw to cut the rabbet around the perimeter of each one to form a tongue (Figure 3). This tongue fits in the groove in the stiles and rails.

MAKE THE GROOVES. You'll notice in the drawings above that the spacing of the grooves is different between the end panels and the door panels. So you'll want to set your router fence for doing one set first before doing the other set of panels. To rout these shallow grooves, I used an 1/8" radius beadboard bit, as shown in Figure 4 at right.

ASSEMBLE. I assembled the doors first, being sure to keep them square as I applied the clamps. For the ends, I dry-assembled these first and held them in place against the ends of the cabinet.

You're looking for a flush fit along the back and top edges. Along the front, they overlap the face frame and cover the ends of the groove that house the lower runner. When you're satisfied with the fit, glue the end assemblies together and when they're dry, glue them to the case.

FINISH-UP DOORS. Just a couple more things are needed to complete the doors. The first is to head to the table saw to cut a groove along the bottom edge of both doors (details 'b' and 'c' on the previous page). This groove slips over the lower runner to help guide the doors as they're opened and closed. Be sure to use a tall rip fence at the table saw to support the doors while making this cut.

I then headed to the drill press to drill four holes in each door for threaded inserts, as you can see in Figure 5 below. These provide a mounting point for the door hanger brackets.

ADD HARDWARE. The drawings on the previous page provide all the information you'll need for adding the steel runners. I sprayed all of my steel parts (except the pulleys) with a coat of black paint before installing them. After making the hanger brackets (Shop Notes, page 64), you're ready to paint them and mount them to the doors (Figure 6).

▲ This shop-made, barn-door hardware works as well as commercially available sets, at a fraction of the cost.

How-To: CUT THE DOOR & END ASSEMBLY JOINERY

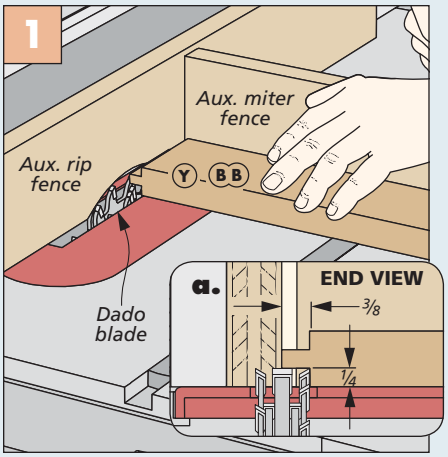

Stub Tenons. Use a dado blade and an auxiliary rip fence to cut the stub tenons on the ends of all the rails.

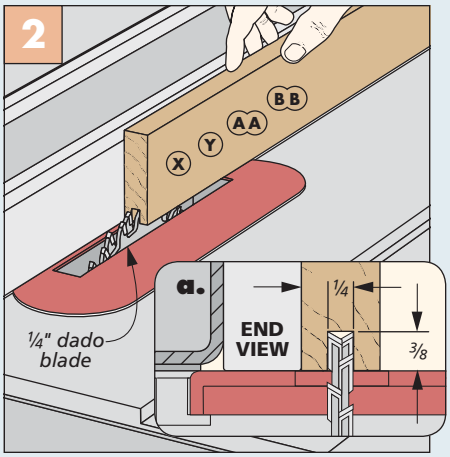

Long Grooves. To complete the door and end assembly joinery, cut the grooves on all of the stiles and rails.

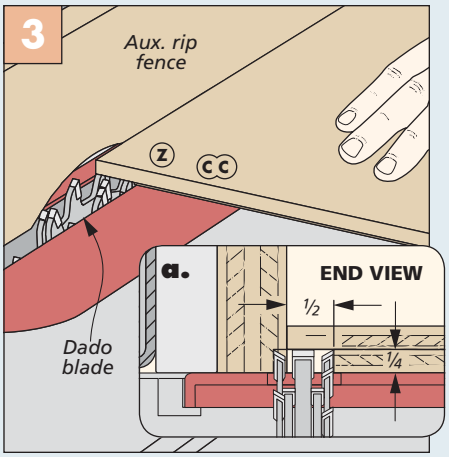

Rabbet the Plywood Panels. Use a dado blade again to cut the rabbet around the perimeter of all the panels.

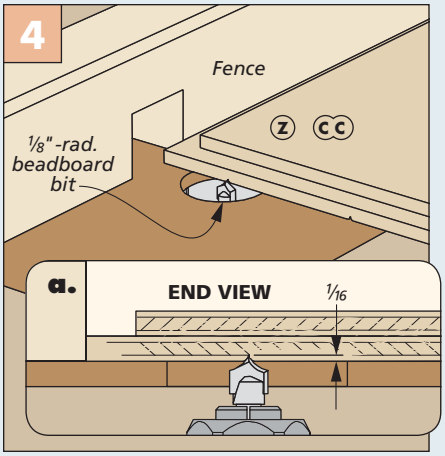

Groove the Panels. A small beadboard bit is used to create the shallow grooves in the door and end panels.

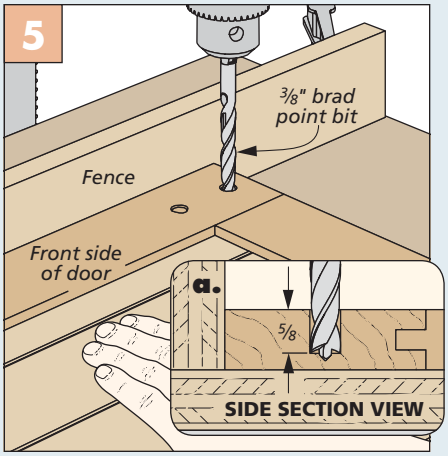

Holes for Inserts. Two holes in each door stile let you add the threaded inserts for mounting the hangers.

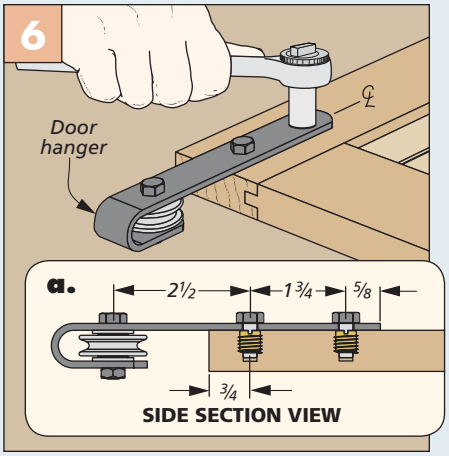

Add the Hangers. Attach the assembled hangers to the doors with two short hex head bolts.

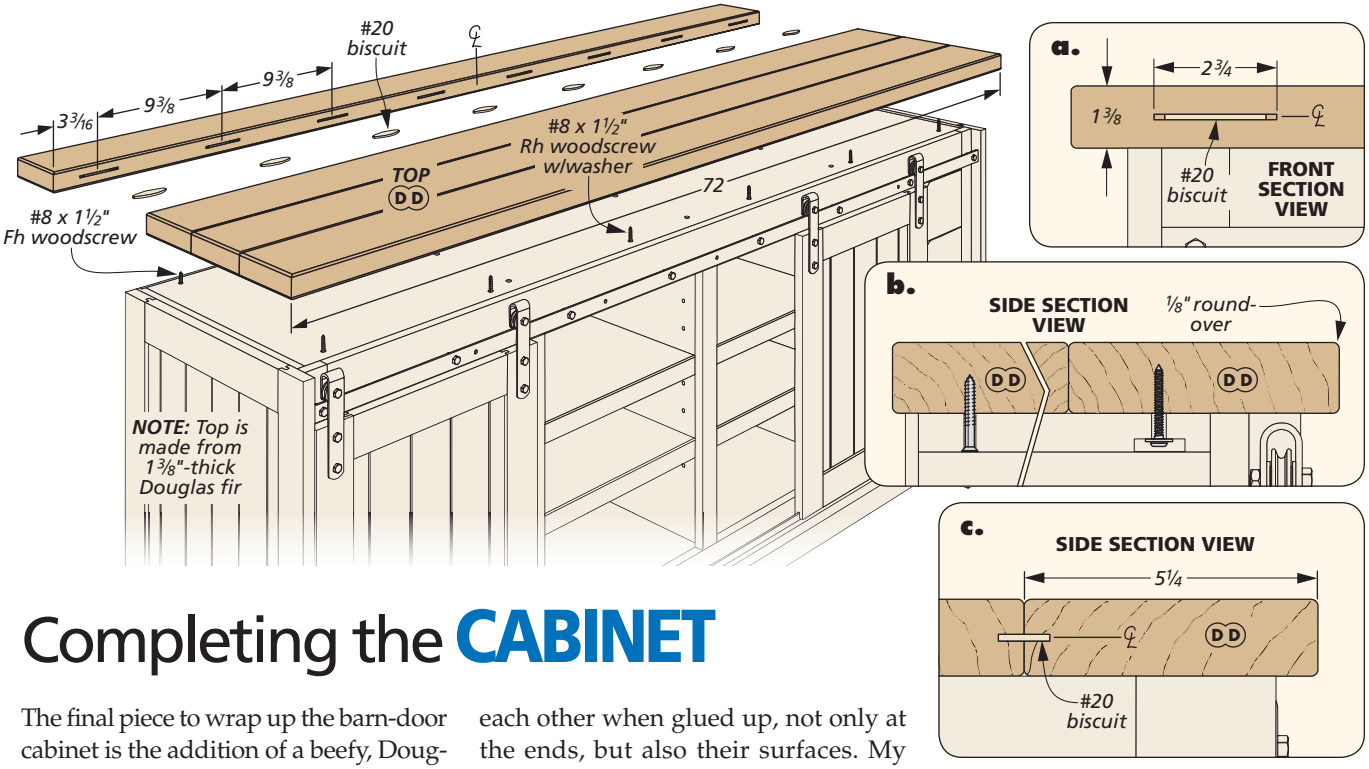

Completing the CABINET

The final piece to wrap up the barn-door cabinet is the addition of a beefy, Douglas fir top. It's made up of thick planks edge-glued together. But instead of a continuous surface, I wanted to create shadow lines between the boards to add to the rustic look. To get this look, I eased the edges of each board with a roundover bit before gluing them together.

Because of the roundovers on the edges, all of the boards have to be planed to their final thickness before assembly. So I had to take special care to ensure the boards stayed flush with each other when glued up, not only at the ends, but also their surfaces. My solution was to use a healthy amount of biscuits between them.

TOP ASSEMBLY. After selecting your boards, plane them to thickness and cut them to size as shown in the drawing and detail 'c' above. Then head to the router table to rout a slight roundover on all of the edges (Figure 1, below).

Laying out the biscuit locations is pretty straightforward, as well (Figure 2). If you don't have a biscuit joiner, dowels will work for this, also.

Now, cut all of the biscuit slots, as shown in Figure 3. In order to avoid a lot of glue squeezeout between the boards on the top side, I put glue directly into the biscuit slots and made sure to keep my glue bead below the centerline of the boards. If a little does squeeze out the top, a pointed scraper can be used to remove it. The top is fastened to the cabinet through the holes you drilled earlier in the case. Be sure to use

How-To: MAKE THE TOP

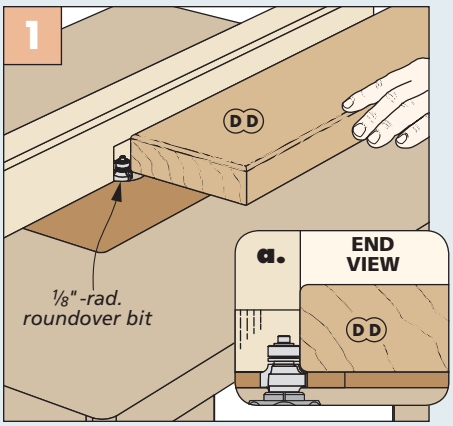

Round Over Edges. Ease all of the edges on each top piece at the router table before gluing them together.

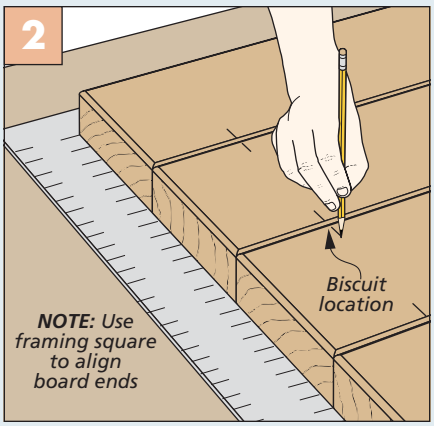

Layout for Biscuits. Position the boards in their final order and mark the locations for the biscuit slots.

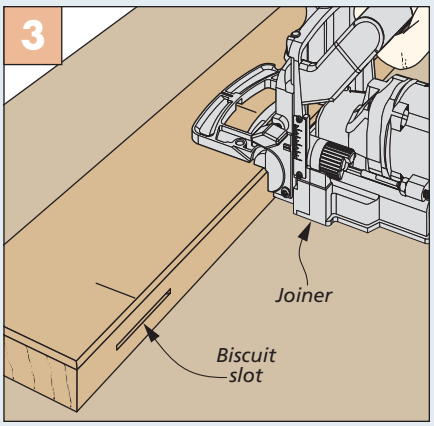

Cut the Slots. Adjust the biscuit joiner to cut slots centered on the edge of the board and make the cuts.

roundhead screws with washers along the front edge holes to allow for any seasonal movement of the top (detail 'b'). (I waited to fasten my top until after I applied finish to the whole cabinet.)

DISTRESSED FINISH

As you can see in the photo on page 44, I actually used a two-tone finishing style to give my cabinet an aged look — one lighter finish for the top and drawer fronts and another darker color for the rest of the cabinet. I achieved this look through a combination of milk paint and glaze. Our online video found at *Woodsmith.com* will show you how to get this look.

One other thing you'll notice is that the entire cabinet has nicks, gouges, and other assorted damage marks. All of this is done during the finishing process through the use of various items in the shop — a short chain to smack the surface to create indents, and various files and gouges to leave marks.

However you decide to finish this cabinet, you're sure to have an heirloom quality piece of furniture. W

Materials, Supplies & Cutting Diagram

A	Case Top/Bottom (2)	3/4 ply. - 18 x 67
B	Case Sides (2)	3/4 ply. - 18 1/4 x 24
C	Case Dividers (3)	3/4 ply. - 18 x 23
D	Back Panel (1)	1/4 ply. - 24 x 67 1/2
E	Long Filler Strips (2)	3/4 ply. - 2 x 68
F	Short Filler Strips (2)	3/4 ply. - 2 x 14 1/4
G	Drwr. Slide Spacers (4)	3/4 ply. - 3 x 22 1/2
H	Upper Face Frame Rail (1)	3/4 x 3 1/8 - 65
I	Lower Face Frame Rail (1)	3/4 x 1 1/2 - 65
J	Outer Face Frame Stiles (2)	3/4 x 1 1/2 - 24 3/4
K	Inner Face Frame Stiles (3)	3/4 x 1 1/2 - 20 1/8
L	Corner Blocks (8)	1 x 4 - 5
M	Long Base Rails (2)	3/4 x 2 - 61 1/2
N	Short Base Rails (2)	3/4 x 2 - 12
O	Front Base Molding (1)	3/4 x 3 3/8 - 70
P	End Base Moldings (2)	3/4 x 3 3/8 - 20 1/4
Q	Base Filler (1)	3/4 x 2 - 63 1/4
R	Drawer Fronts (8)	3/4 x 4 15/16 - 15
S	Drawer Backs (8)	1/2 x 4 15/16 - 13 5/8
T	Drawer Sides (16)	1/2 x 4 15/16 - 18
U	Drawer Bottoms (8)	1/4 ply. - 13 5/8 x 17 1/2
V	Shelves (4)	3/4 ply. - 17 5/8 x 16 1/8
W	Shelf Edging (4)	3/4 x 1 1/4 - 16 1/8
X	Door Stiles (4)	3/4 x 2 1/2 - 21 9/16
Y	Door Rails (4)	3/4 x 2 1/2 - 12 1/4
Z	Door Panels (2)	1/2 ply. - 12 1/4 x 17 5/16
AA	End Stiles (4)	3/4 x 2 1/2 - 24 3/4
BB	End Rails (4)	3/4 x 2 1/2 - 15 3/4
CC	End Panels (2)	1/2 ply. - 15 3/4 x 20 1/2
DD	Top (1)	1 3/8 x 21 - 72

- (56) #8 x 1 1/2" Fh Woodscrews
- (6) #8 x 1 1/2" Rh Woodscrews w/Washers
- (18) #8 x 1 1/4" Pocket Screws
- (8 pr.) 18" Full-Extension Drawer Slides
- (2) 1/8" x 1" Steel Bars (6' long)
- (1) 1/8" x 3/4" Steel Bar (6' long)
- (4) 1 1/4" O.D. Pulleys
- (4) 1/4" x 1"- 20 Hex Bolts
- (4) 1/4"- 20 Jam Nuts
- (28) 1/4" Washers
- (8) 1/4" x 5/8"- 20 Hex Bolts
- (8) 1/4"- 20 Threaded Inserts
- (6) 1/4" x 1 3/4"- 20 Hex Bolts
- (6) 1/4"- 20 Hex Nuts
- (8) 1/4" I.D. x 1/2" O.D. x 1/2" Nylon Spacers
- (2) 1/4" x 1 1/2" Lag Screws
- (24) #20 Biscuits
- (16) 1/4" Shelf Pins

3/4" x 7" - 72" Poplar (3.5 Bd. Ft.)

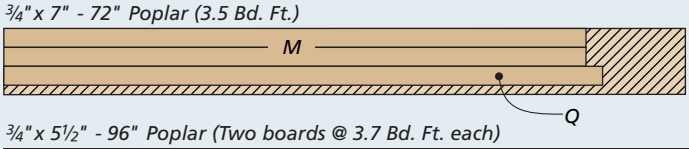

3/4" x 5 1/2" - 96" Poplar (Two boards @ 3.7 Bd. Ft. each)

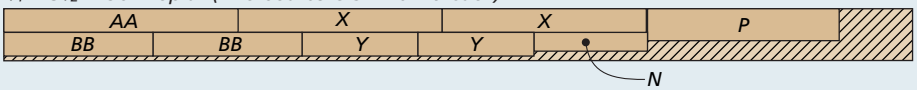

3/4" x 5 1/2" - 96" Poplar (3.7 Bd. Ft.)

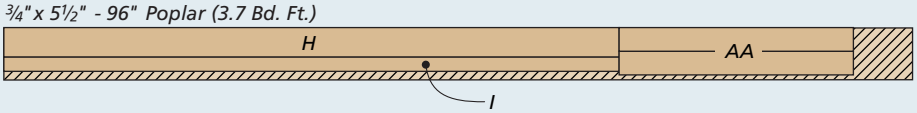

3/4" x 6" - 96" Poplar (4 Bd. Ft.)

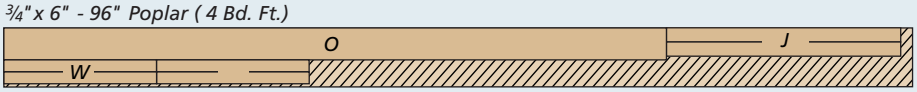

ALSO NEEDED: *Two - 48" x 96" sheets of 3/4" Birch plywood. Two - 48" x 96" sheets of 1/4" Birch plywood. One - 48" x 96" sheet of 1/2" Birch plywood*

1" x 5" - 48" Poplar (2.1 Bd. Ft.)

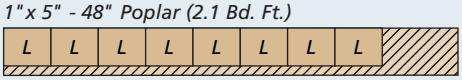

1/2" x 5 1/2" - 84" Hard Maple (Four boards @ 3.2 Sq. Ft. each)

1/2" x 5 1/2" - 60" Hard Maple (Two boards @ 2.3 Sq. Ft. each)

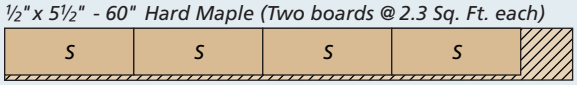

3/4" x 5 1/2" - 72" Douglas Fir (Two boards @ 2.8 Bd. Ft. each)

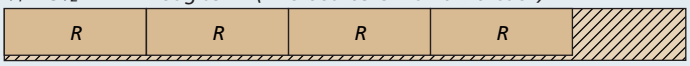

1 1/2" x 5 1/2" - 84" Douglas Fir (Four boards @ 6.4 Bd. Ft. each)

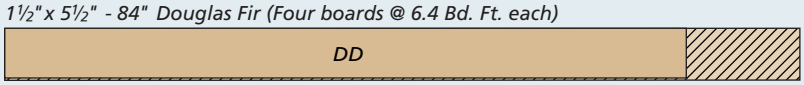

Shopping for a Band Saw

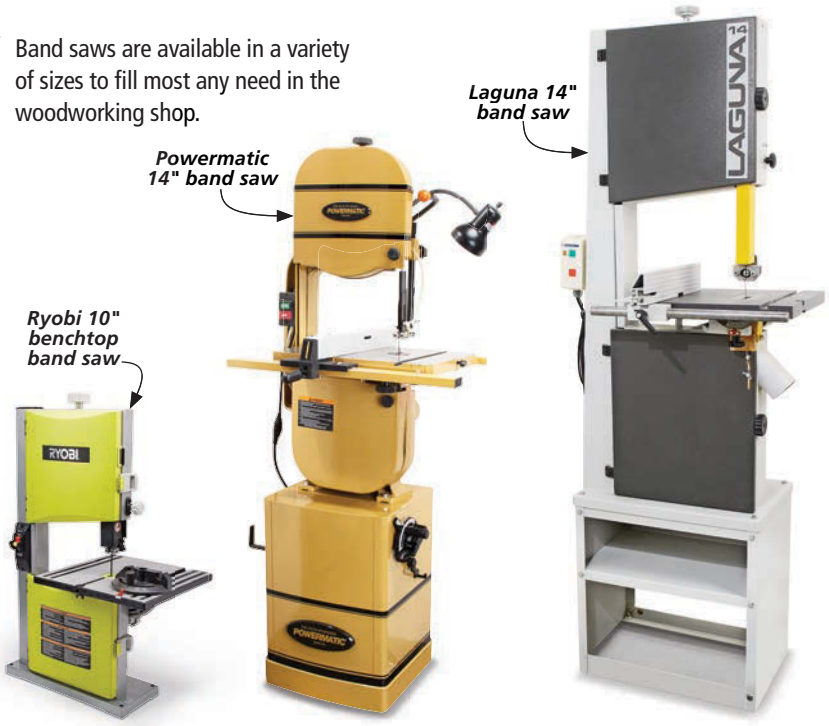

Band saws are available in a variety of sizes to fill most any need in the woodworking shop.

A band saw can be one of the most versatile tools in the workshop. From cutting joinery and curves to ripping and resawing, it can see a lot of use.

With all this practicality, you may be considering adding a band saw to your shop. As you can see on the left, there are many options available, so it can be difficult to make the right choice. I'll point out a few things to consider.

PRIMARY USES

The first thing you need to consider when shopping for a band saw is how it will be used. What cutting tasks will you be expecting to perform with the saw?

Does your work involve ripping stock to width or resawing thin veneer from thicker stock, as in the main photo? Are you a modelmaker that works with smaller workpieces? Or are you looking for a mid-range band saw that can handle a wide variety of common tasks

Written By: Randy Maxey

in the workshop? Answering these questions can help narrow your selection to a saw that will satisfy your needs.

SPACE REQUIREMENTS

Another important factor is the available shop space for the band saw. And I don't just mean the amount of floor space it requires. You'll want to know the footprint of the saw, but even its height can play into your decision.

SIZE IT UP. Benchtop saws don't take up much space. But 14" saws and larger can take up considerable floor real estate. With any band saw, it's important to also take into account room for the largest workpiece you're likely to cut. You'll need room to maneuver.

With saws larger than 14", you'll also need to make sure there's enough headroom to fit the taller saw. Some of the larger-capacity, steel-frame saws can reach up to 80" tall or more.

WHAT'S IN A NAME?

By now you can imagine the possibilities of what a band saw can do for you. But when it comes to shopping, the marketing terminology can get a little bit confusing if you're not familiar with it.

▲ Some cast iron band saws can accommodate a riser block that provides more resaw capacity.

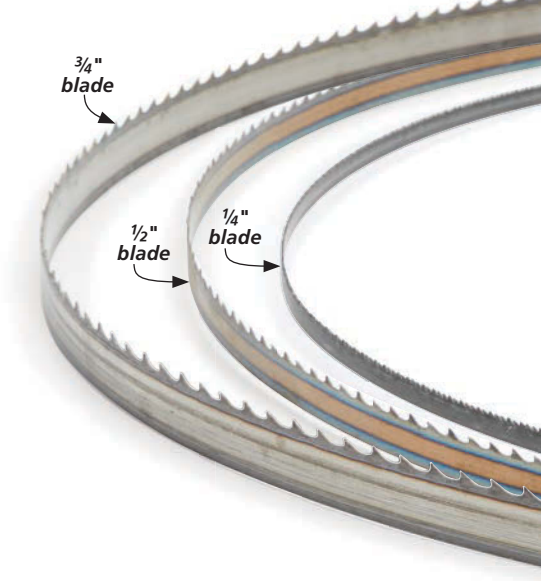

▲ Larger band saws can accept wider blades, which makes them more suitable for resawing lumber into thinner stock.

WHAT THE NUMBERS MEAN. When you look at the sales information for band saws, you'll see labels like *14" Band Saw* or *18" Band Saw*. You might be led to believe that this number is the maximum width of cut or throat depth from the blade to the frame. And you'd be close to being right.

Band saws are typically classified according to their wheel diameter. A 14" band saw will have 14"-diameter wheels. The throat depth takes into account the frame of the saw, so it's always slightly less than the wheel diameter.

▲ Traditional band saw construction uses cast iron frames (left photo). Steel frames offer larger capacities with less weight (right photo).

RESAW HEIGHT. If you like to resaw thick stock into thinner workpieces, you'll also be concerned with the overall resaw height. This is the distance from the table to the upper blade guides at their highest setting.

A 9" band saw has a maximum cutting height of about 3½". With traditional, cast-iron 14" band saws, the standard 6" resaw height can be extended to 12" with a riser block. It fits between the lower and upper halves of the frame. See the upper left photo. Band saws with a steel frame have a fixed resaw height. A 20" saw may have a resaw capacity of 16", for example.

BAND SAW CONSTRUCTION. I mentioned two types of frame construction you'll find on band saws: Cast iron and tubular steel (refer to the middle right photos). For decades, 14" band saws were made with a cast iron frame. Over the years, manufacturers have migrated to steel-frame saws. The ease of manufacturing and shipping costs were a driving factor. This means that saws much larger than 14" are more readily available.

MOTOR SIZE. As you would expect, greater sawing capacities require more horsepower. The larger saws can have 220v motors up to 5hp (photos at left) and require a 220v electrical circuit.

BLADE CHOICES. The type of work you want to do with your band saw plays into the types of blades you can use (upper right photo). Most saws can accept ⅛"-wide blades for making intricate cuts. But every saw has a maximum blade width it can handle. It helps to make sure the blades that fit your saw are easy to find.

▲ Band saws with greater resaw capacities require more horsepower. Expect to find 220v motors up to 5hp or greater.

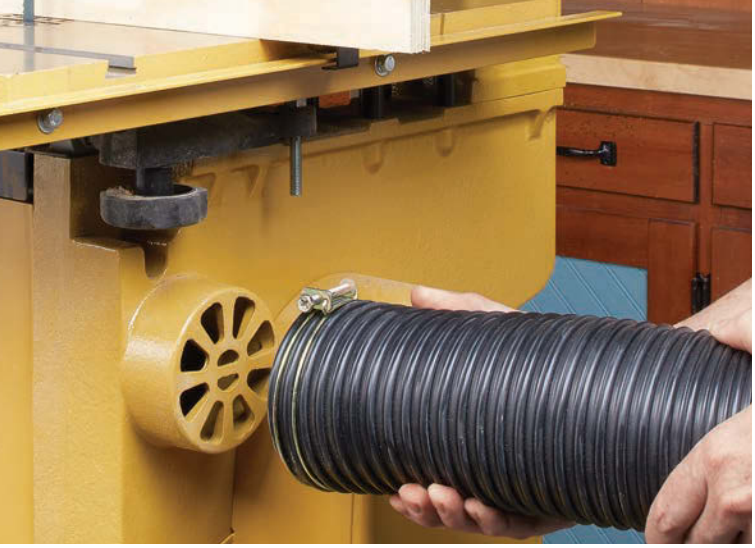

Sawdust can get packed between the blade and tires. Dust collection at the underside of the table is a minimum requirement. An additional port near the bottom at the is a bonus.

The mass of a cast iron table (left) is beneficial for reducing vibration which results in smoother cuts. Smaller saws may have a cast aluminum or stamped steel table (right).

OTHER FEATURE CONSIDERATIONS

In addition to the things I've already mentioned, there are some other features you can look for in a band saw. Some of these you may find more important than others but are worth mentioning.

DUST COLLECTION. The blades and wheels on a band saw are shrouded by an enclosure for safety. But this creates areas where sawdust can build up on the tires and blade.

It's important to have dust collection ports on the saw. At a minimum, there should be a a hose attachment near the blade on the underside of the table, as in the upper left photo. This grabs the sawdust at its source. Some saws also include a dust port near the bottom of the lower wheel, as you can see in the upper right photo on the next page.

ALUMINUM OR STEEL. As you're shopping for saws, you may notice that some benchtop saws feature a cast aluminum or stamped steel table. Larger saws usually have a cast iron table. Cast iron has the advantage of adding mass to help reduce vibration, as shown in the upper right photos. Benchtop saws can be securely mounted or clamped to a benchtop to reduce vibration.

REPLACEABLE INSERTS. While we're on the subject of tables, you'll want to make sure it's easy to purchase replacement inserts (lower left photo). These are usually plastic or aluminum and can get chewed up over time, which is normal. This creates a larger opening around the blade that can trap cutoffs. You can usually purchase inserts directly from the manufacturer or retailer.

Replaceable inserts create zero-clearance support around the blade for cleaner, safer cuts.

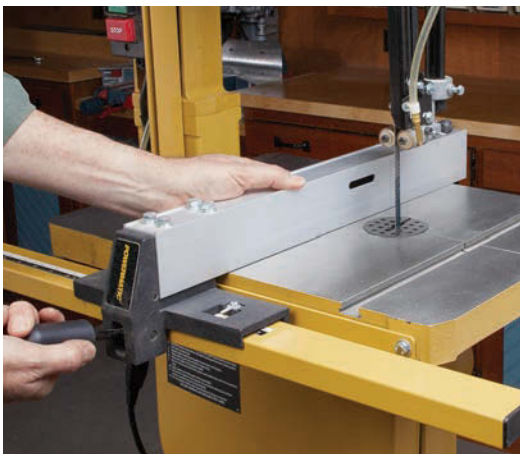

A quality band saw fence is an important consideration, particularly if you do a lot of ripping or resawing. Aftermarket fences are a good option.

BAND SAW FENCE. As I mentioned earlier, a band saw is ideal for resawing thick lumber into thinner stock or veneer. And ripping stock to width is a safer and more efficient operation on a band saw than it is on a table saw.

For both ripping and resawing, a fence is one feature you'll want to consider. A band saw fence has some unique requirements. First, the angle of the fence relative to the blade should be adjustable. This way, the fence can be set to match the drift angle of the blade. It's also a benefit to have a fence with a tall face for resawing.

Not all saws are supplied with a fence, so you'll want to know this up front. If that's the case, purchasing a third-party fence is always an option (box on next page). As a matter of fact, after-market fences may be of better quality with more features than a stock fence.

BLADE TENSIONING. I briefly mentioned band saw blades and how the size of the saw determines the maximum width of blade you can use. Regardless of the blade, it's important that it be tensioned properly during use.

Band saws have a mechanism (usually a knob) that effectively changes the distance between the wheels to change the amount of tension on the blade. When properly tensioned, there can be as much as 30,000psi of tension on a blade. This creates a lot of strain on the wheels' bearing and shaft assemblies.

Rather than leave the blade tensioned when not in use, some manufacturers

▲ A quick turn of the blade tension release lever makes it easy to relieve the tension on the blade after using the band saw. This mechanism can be found on newer saws and is also available as an aftermarket item for older saws.

▲ Just like your car or truck, pushing on a pedal engages a braking mechanism to slow the spinning wheels and blade on some band saws.

have incorporated a tension-release mechanism into their saws (photo, above left). After using your saw, all it takes is a quick pull on the lever to relax the blade and release the tension.

PUT THE BRAKES ON. If you've ever used a band saw, you may have noticed that the wheels and blade can keep spinning for several seconds to minutes after the power is switched off. This is due to the momentum of the finely balanced wheels. The problem is, it's unsafe. The blade, as long as it's still moving, has the potential to keep cutting. This is particularly a concern on larger saws with heavier wheels.

Many saws incorporate one of two types of brake mechanism. One type is built into the motor. When the power is shut off, an electromagnet stops the rotation of the shaft.

A mechanical brake is operated much like your automobile. This type of brake is shown in the upper right photo. When you step on a pedal, pads engage a braking plate to stop the wheel.

BUDGET. Of course, your hunt for a new band saw shouldn't start without consideration of your budget. Benchtop saws can be purchased for around $100. 14" band saws run from $500 to $1,000 or more. From there, the price reaches into the mid $1,500s and higher. If a new saw isn't in your budget, consider upgrading a used band saw with the products shown below. W

Upgrades: SOUP UP AN OLD SAW

If a new band saw isn't in your budget, there are some easy ways to add new life to an older used saw. The products shown here are easy to find at retailers that specialize in woodworking supplies. These upgrades and accessories are easy to install, and you're sure to see better results. Refer to Sources on page 67.

◄ Phenolic *Cool Blocks* from *Olson* replace older metal or plastic guide blocks.

▲ Urethane tires replace worn, cracked tires that have become hard and caked with sawdust.

▲ Replace factory guide bearings with these high-quality units from *Carter.* You'll get more accurate cuts.

▲ After-market fences like this *Kreg Precision Band Saw Fence* are an easy upgrade that pays off with easier, more accurate ripping and resawing cuts.

Shop Inventory

Woodsmith GO ON-LINE EXTRAS

To download an inventory spreadsheet, visit our website at Woodsmith.com.

Over time, most woodworkers build quite a collection of tools. And one thing we tend to neglect is keeping track of what we have. But if something unfortunate should happen, such as a fire or burglary, would you be able to accurately list what you had for insurance purposes? Even though such an event may be unlikely, I realized I'd be hard-pressed to come up with a complete list of all my tools. So I decided to create a detailed inventory — if for nothing more than peace of mind.

WORKSHOP INVENTORY		WOODWORKER INFORMATION					
		NAME	John Woodman				
		ADDRESS	123 Oak Street				
		CITY, STATE, ZIPCODE	Des Moines, IA 50312				
		PHONE (Home)	123-456-7890				
		PHONE (Cell)	987-654-3210				
Tool Description	Company/ Brand	Location	Model Number	Serial Number	Date Purchased or Rcvd as Gift	Location Purchased	Warranty Valid Thru Date
Table Saw	SawStop	Main Floor	PCM-30L	12345678	12/12/12	Woodsmith Store	3 Year
Drill	Ridgid	S. Wall Cab.	R86008	CS12391DB20154		Home Depot	
Impact Driver	Ridgid	S. Wall Cab.	R86034	CS12390N150608		Home Depot	
Rotary Tool	Dremel	N. Wall Cab.	800	N/A	Unknown	Woodsmith Store	Expired
Knife Sharpener	Worksharp	N. Wall Cab.	WSKTS	00001515	Unknown	Woodsmith Store	Expired
Multimeter		N. Wall Cab.	10040N	1701009916	Unknown	Lowes	Expired
Drill Bit Set	DeWalt	S. Wall Cab.	363004-00	N/A	Unknown	Unknown	N/A
Countersink Set		S. Wall Cab.	Various	N/A	Unknown	Online	N/A

▲ A spreadsheet program is a simple solution to keeping track of all the important details related to your shop equipment and supplies. Besides being easy to fill in, it doesn't take much to modify the setup to suit your specific needs.

GETTING STARTED

My original method of "tracking" was to toss the manuals, receipts, and warranty info into a drawer. Of course, that was in the shop — so it wasn't going to do much good if something bad happened.

Realizing I needed a better method, I looked for computer or phone applications I could use, but didn't find much that suited the needs of a woodworker. So I decided the easiest way would be to come up with my own digital solution.

SPREADSHEET. Don't worry, what I'm suggesting is something simple — a spreadsheet, like the one shown above. My preferred choice is *Excel* since it's something I've worked with for years. Starting with an empty spreadsheet, simply create separate columns for the types of information you'd like to keep track of. That info is up to you, but if you want to get a quicker start, check out the online extra at *Woodsmith.com* for a ready-to-go spreadsheet template.

Written by: Bryan Nelson

START SMALL. Completing this process can seem overwhelming at first, especially if you have a large, extensive shop. So instead of focusing on your entire shop, start with something small.

Most shops have drawers or small cabinets, so that's a good place to begin. I'll start by taking a photo of the contents, spreading things out if necessary to make sure everything is shown (main photo, opposite page). For some tools, I'll take a photo of the product label just to make sure there's no doubt as to the model or serial number (photo at right).

With the photos in hand, it's a simple matter to enter information into the spreadsheet. Since I'm already at my computer, I can easily look up average pricing, sources, and any other info I need. Once I have the contents of that drawer or cabinet detailed, I move on to the next one, repeating the process until I've inventoried the entire shop. And if you don't have all the information you need for each item, record what you can and fill in the blanks with additional research as you track it down.

Create multiple backups of your shop inventory by copying the file to separate thumb drives.

OTHER ITEMS. One thing you'll discover is some items don't fit the "tool" category. I've built my own benches, jigs, and accessories. Plus, I keep lumber and consumables such as finishes, hardware, and glues in my shop. These things have value and are important to record.

I created separate tabs in the spreadsheet for these items — one for things I've built and another for consumable items. Don't forget to add in the value of your labor on the things you've built.

VIDEO SUPPLEMENT. A detailed spreadsheet is a great solution for knowing exactly what you have along with photos. But there's one more thing I like to do, and that's make a video of my shop.

Using my cellphone, I walk through my shop, making sure everything I have listed on the spreadsheet is captured in the video. Open drawers and cabinet doors and move things around if necessary so nothing is hidden.

UPDATE & BACK UP. Once you have your inventory completed, keeping it updated is easy. After any new purchase, it doesn't take long to add the information to your inventory.

Model and serial numbers are key for documenting exactly what tool you have in your inventory for insurance purposes. Numbers are located on the tool.

Of course, should something happen that requires filing an insurance claim, you'll need to get that information to your insurance agent. That means having it readily accessible — so don't store it in the shop.

Sure, I keep a copy there for review and to easily update it. But back up the files to a couple of thumb drives, too (photo at left). I give one to a family member and store one in my drawer at work. The "cloud" is a great option, too. You simply need an accessible copy stored away from your shop.

The information I keep track of is based on discussions with my insurance agent. You'll want to touch base with your agent before you begin. After that talk, you can modify the spreadsheet to make sure you have exactly what you need. W

How-To: STORING MANUALS, WARRANTIES & RECEIPTS

A spreadsheet keeps track of the key information related to all your shop equipment. But most tools come with an instruction manual, warranty information, and a parts list. And the sales receipt shows not only what you paid, but also exactly when and where you made the purchase.

It's a good idea to scan this information and include it on your thumb drive as well. But I also like to keep a hard copy on hand in the shop for reference. Storing this material so it's accessible and easy to find can be a challenge.

To solve the problem, I bought a few three-ring binders and some plastic insert sleeves. Each sleeve holds all the info associated with a specific tool, making it easy to find exactly what I'm looking for.

Odd-sized manuals and receipts slip easily into plastic sleeves for storing in three-ring binders.

Locking rabbet Drawer Construction

▲ A drawer front with a lipped locking rabbet joint is perfect for concealing full-extension drawer slides.

I typically try not to overthink the process when building drawers for projects. Even though they're almost like building mini projects inside of a larger build, the joinery is usually pretty straightforward. But there's always an assuring sense of satisfaction when all of the parts come together nice and square. In order to keep my drawer construction easy, as well as rock-solid, I turn to a common joinery technique time and again — the locking rabbet — or some variation of it.

WHY USE A LOCKING RABBET? Whether the drawers in your project have handles attached to the front, recessed pulls in the front face, or a handhold cutout along the top edge of the drawer, all of the force required to open a drawer happens along the front. The locking rabbet joint does just what its name implies — it locks the drawer sides to the front to absorb the lateral energy created by pulling on the drawer front. This means the joint, held together with only glue, will hold up to years of opening and closing.

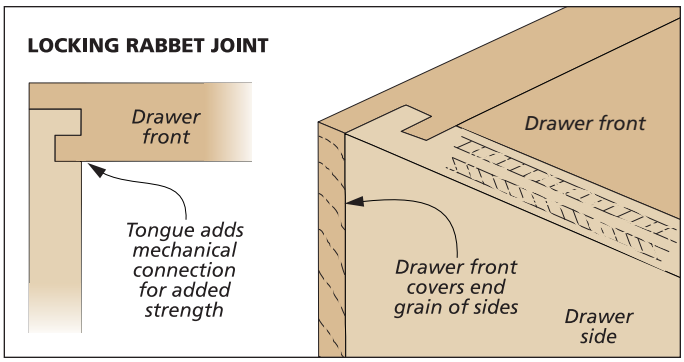

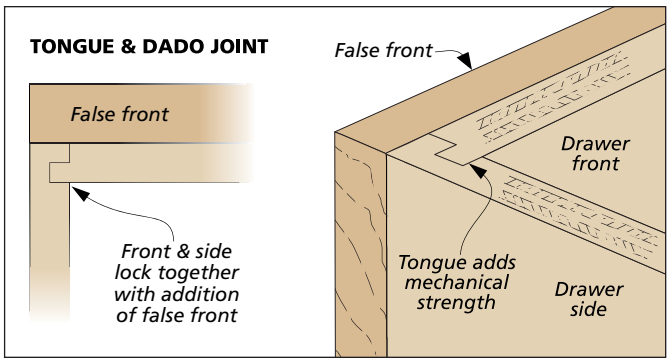

Written by: Robert Kemp

▲ The drawer front receives a centered groove on both ends. Be sure to use a tall backer board to hold the piece vertical.

▲ Clip off part of the tongue on the inside of the front. The remaining tongue locks together with the side.

▲ A shallow dado in the drawer side forms a mating tongue that interlocks with the groove cut in the drawer front.

TWO TYPES OF LOCKING RABBETS. The two basic types of locking rabbet joints that I turn to most often are shown in the illustrations at the bottom of the previous page. The first is a standard locking rabbet with a groove cut in the end of the front and a dado in the side piece that interlocks with the front.

The other type uses a false drawer front that, when added to the drawer front, creates the locking rabbet joint. This is essentially just a tongue and dado joint, but it functions just like a locking rabbet.

ADDED BENEFITS. Besides the superior strength that the locking rabbet joint provides, it also has other benefits. The first is that the groove cut in the edge of the drawer front can be cut deeper than the thickness of the side. This forms a lip on the outside edge of the drawer front and can be used to hide drawer slides (inset photo, previous page). Another option is to create that same lip around the entire perimeter of the drawer front to overlap a face frame. The box below talks more about this style of locking rabbet.

But the thing I like most about locking rabbet joinery is that it's easy to setup and cut. You can usually get by with one dado blade thickness for all of the cuts. On a drawer with a ¾"-thick front, a ¼" dado blade is ideal. This same setup will work even if your drawers have different widths and heights.

MAKING THE CUTS. The grooves in the ends of the drawer fronts are the best place to start (Photo 1, above). Here, the height of the blade should match the thickness of the drawer side for a flush outside edge. Or, when making a lip to hide drawer slides, the blade height should be set at the thickness of the side, plus the thickness of the drawer slide (typically ½"). Be sure to use a tall auxiliary fence and backer board to hold the drawer front vertical.

With the same blade in the saw, lay the drawer front flat on the saw and remove half of the inside facing tongue, as shown in Photo 2. That finishes the drawer front portion of the joint.

Finally, the depth of the shallow dado in the drawer side piece should match the thickness of the short tongue on the inside of the drawer front (Photo 3). When complete, your pieces should lock together with no gaps, forming a joint that will last for generations. W

How-To: FULL-OVERLAY LOCKING RABBET

On some projects, simply overlapping the outside ends of the drawer front isn't enough. Sometimes you want that overlay to extend around the entire outside edge of the drawer. This style of locking rabbet, shown at right, works great when installed in projects with a wide face frame.

ONE EXTRA STEP. Creating this joint follows the same procedure as a regular locking rabbet joint with one extra step. You'll cut a rabbet along the top and bottom edges of the drawer front to match the reveal along the edge. The side locks in place in the same fashion.

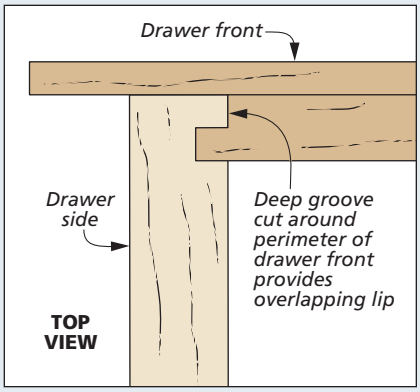

Frame Pieces. The anatomy of the lipped locking rabbet is very similar to a standard locking rabbet.

▼ A full lip around the perimeter of the drawer front allows it to overlap the case or face frame.

Illustrations: Bob Zimmerman

tips from our shop

Shop Notes

Octagonal Canister Glue-up

Creating an octagonal canister, such as the knife block on page 18, is straightforward using a bird's mouth router bit. Clamping a multi-sided project, however, can be a more difficult task. By using the clamping forms shown on page 20, that task is made easier. But a specific assembly order will make it go smoothly.

SMOOTH GLUE UP. In addition to using the clamping forms and wedges, I found a key to a successful glue up on the canister is to use a glue with a long open time, such as slow-set epoxy or liquid hide glue. These glues provide enough open time to position everything in place before the glue sets up.

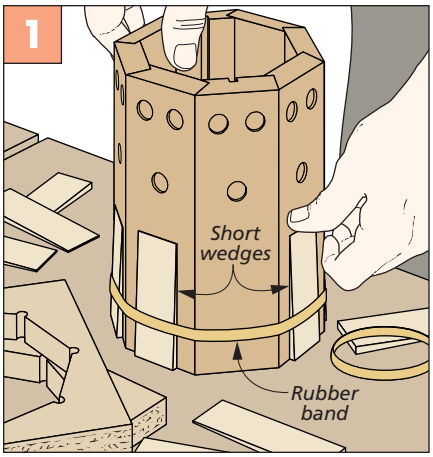

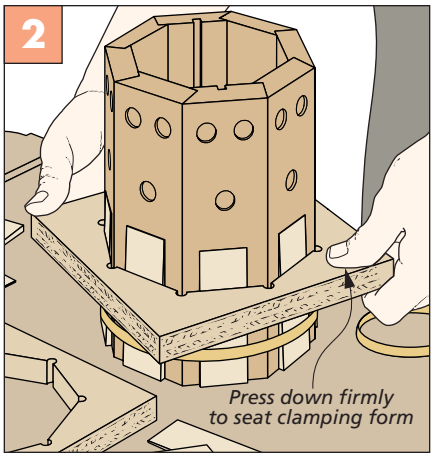

BOTTOM WEDGES FIRST. To assemble the canister, start by making sure the bottom is in place. Before placing one of the clamping forms over the container, use a rubber band to hold the wedges to the face of each stave, as shown in Figure 1. Next, you can slide the lower clamping form over the canister and seat it over the wedges. Press it down firmly for a friction fit (Figure 2).

TOP FORM. With the bottom clamping form in place, you can move to the top half of the container. Here, you'll want to put the clamping form on the canister first. Wedges can then be placed between the canister and the staves and tapped in place. Make sure to place the wedges on opposing faces to keep even pressure on the canister until all of the wedges are in place. Then use a small mallet to tap all the wedges (both top and bottom) firmly into place (main photo).

Drilling Jig

The display shelf on page 30 uses connector bolts and threaded inserts to link the shelves to the uprights. To ensure this is a seamless transition, it's critical that the inserts are installed squarely in the uprights. That starts with a hole in the shelf that is perfectly plumb. However, drilling a plumb hole with a drill can be tricky. The drilling jig you see to the right is the solution to this problem.

DETAILS. To use the drilling jig, align it to the back of the upright and clamp it firmly against the guides. Then, drill each hole the proper depth for the insert (Figure 1).

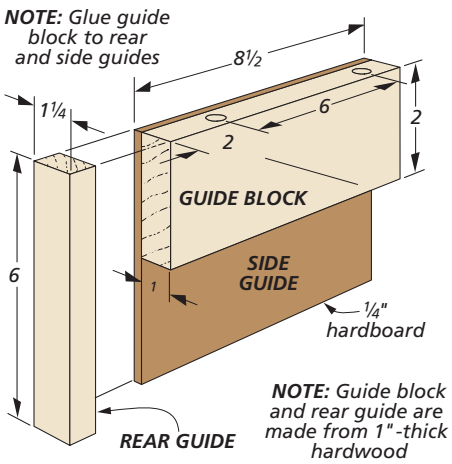

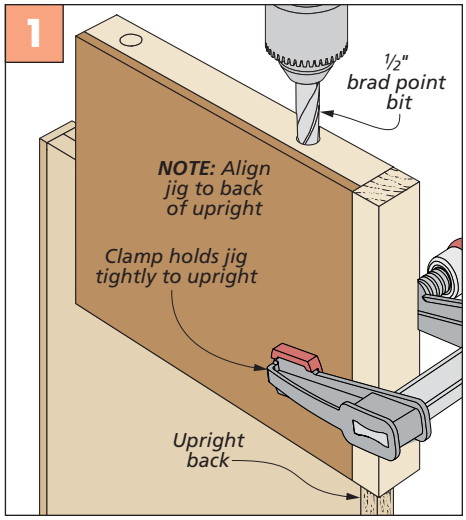

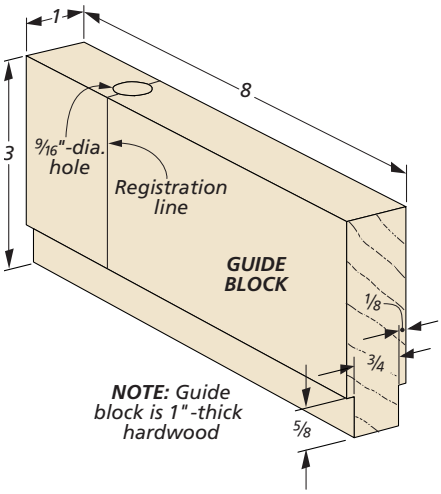

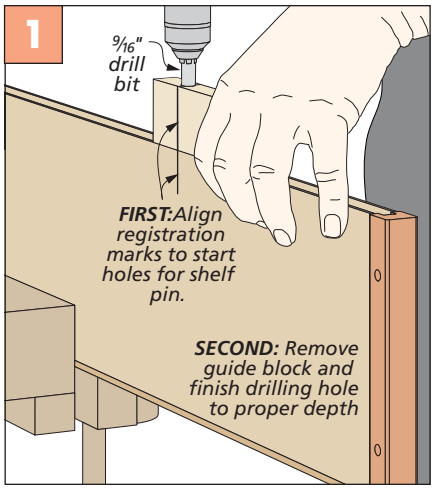

Guide Block for Shelves

The beauty of the display shelf on page 30 is its sleek, thin profile. This is accomplished in part by the concealed hardware used to mount the unit to the wall.

The hardware consists of two long steel pins. One goes in the wall stud. The other goes into the shelf through a hole in the back. To guarantee that the hole in the shelf is drilled straight, I made the guide block you see here.

It's just a block of wood that is rabbeted along two edges. This lets you set the block in the shelf groove and align it to the mark on the face of the shelf.

Cutting an Octagon

The bottom and base of the knife block on page 18 are octagonal in shape. Due to their small size, cutting these parts on a miter saw could be an unsafe operation. So it's best to cut them at the table saw using a miter gauge with an auxiliary fence.

OCTAGON WITH ARCS. To lay out each octagon, start with an oversized blank and mark the perimeter cut lines, along with the center point. Next, set a compass from one corner to the center. Scribe an arc from each corner to the perimeter lines (Figure 1). At the table saw, trim the blank along the perimeter cut lines. Now, connect the points where the arcs meet the perimeter edge (Figure 2).

CORNERS. To cut the waste from the four corners, set your table saw miter gauge to 45° with an auxiliary fence. Line up the cut on your workpiece with the blade, and clamp a stop block in place. Now, it's a simple matter of making the first cut and rotating the workpiece to remove each corner (Figure 3).

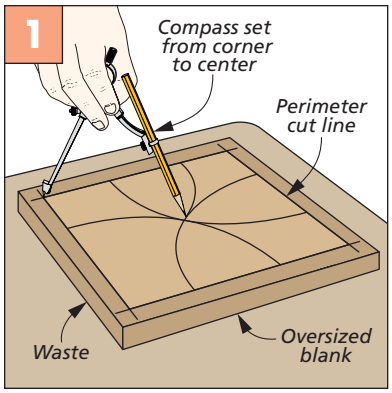

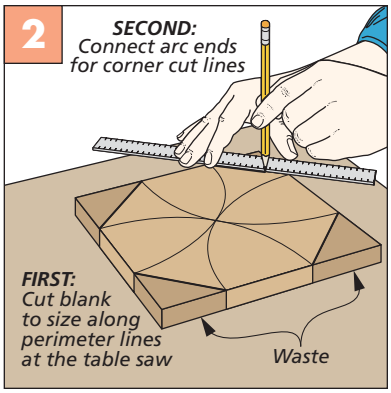

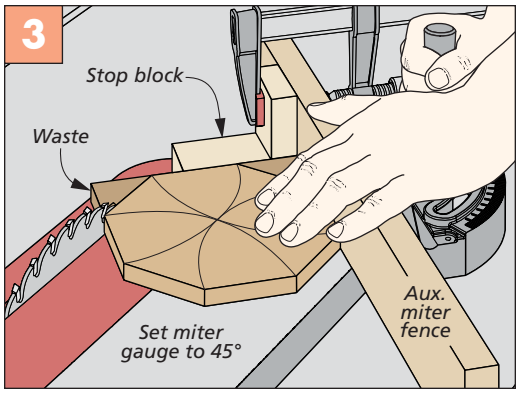

Installing Drawer Slides

The eight drawers in the barn-door cabinet on page 44 ride on full-extension drawer slides. Installing these slides without some kind of helper can be a tricky proposition. So what I did was make a spacer from a piece of hardboard, as you see here.

MULTIPLE LEVELS. Starting with the spacer cut to the length shown in Figure 1 allows you to install all of the upper slides in the cabinet. When they're attached, simply cut the hardboard spacer down for the slides just below, as shown in Figure 2. The bottom slides are 1/16" up from the bottom of the case.

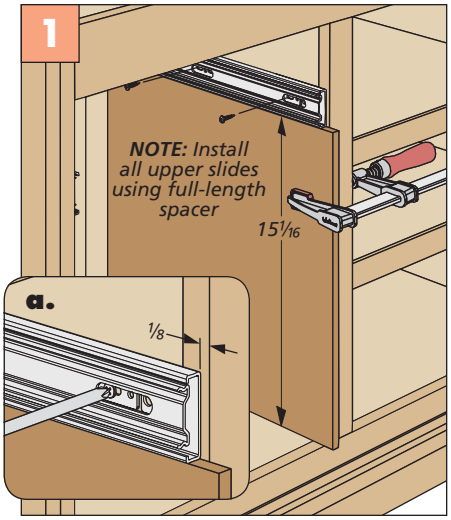

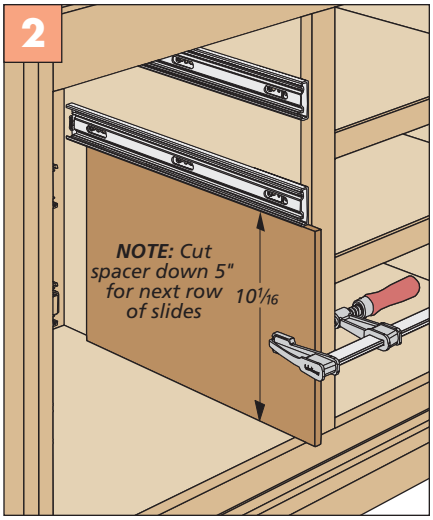

Bending Brackets

The barn-door cabinet on page 44 has four shop-made brackets for hanging the doors. These brackets are nothing more than a piece of bent steel with a pulley bolted in the middle. Getting a consistent bend in all four of the brackets can be somewhat difficult. To ensure my brackets were all uniform, I made the simple bending jig shown here.

PLYWOOD GUIDE. The jig is two pieces of plywood sandwiched together. The guide has a rounded top edge to match the bend in the bracket (detail 'a'). The base has a shallow dado that is the same width as the steel I used to make the brackets (1"). A thin, hardboard stop glued in the dado ensures the short arm of each bracket will be the same length after they're bent to shape.

ROUND OFF & SHAPE. Before bending the first bracket though, I rounded one end of my steel bar (Figure 1). Then, with the bending jig clamped to a bench, slip the rounded end of the steel bar in the opening in the jig and bend the bar over the top of the guide (Figure 2). A clamp can be used to help pull it all the way down (Figure 2a). After cutting the bracket to length, head to the drill press to drill the mounting holes as shown in Figure 3. Finally, round the long arm to match the roundover on the other end. W

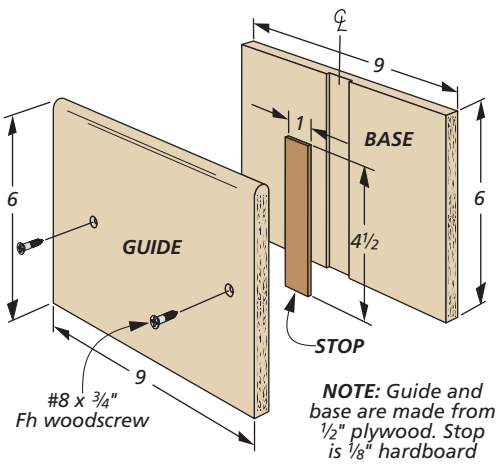

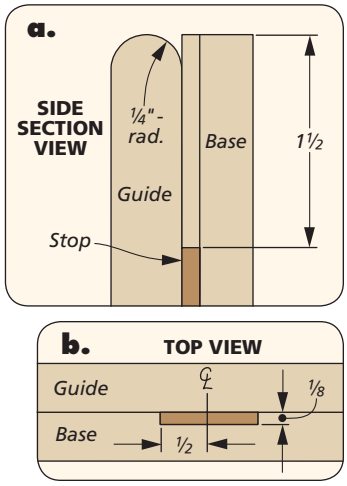

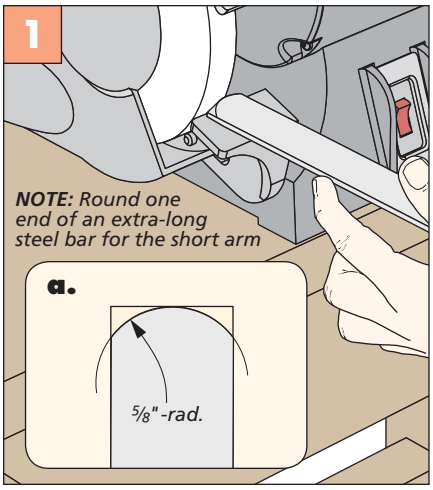

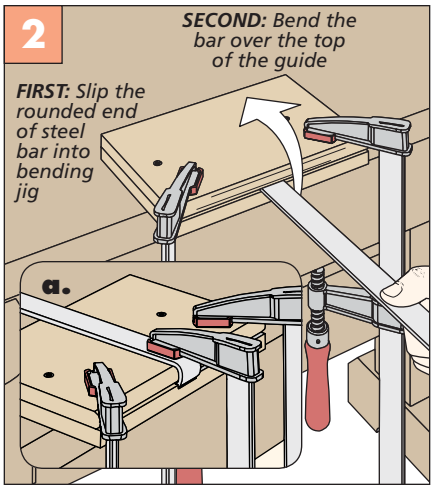

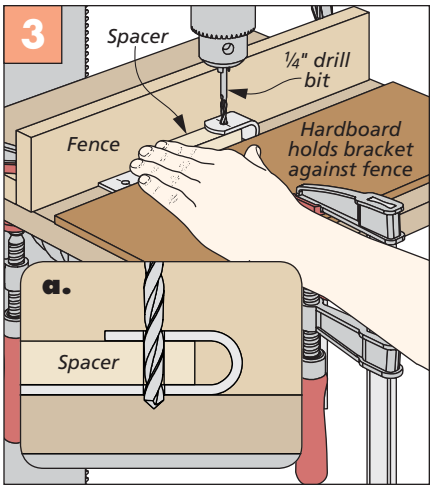

hardware & supplies
Sources

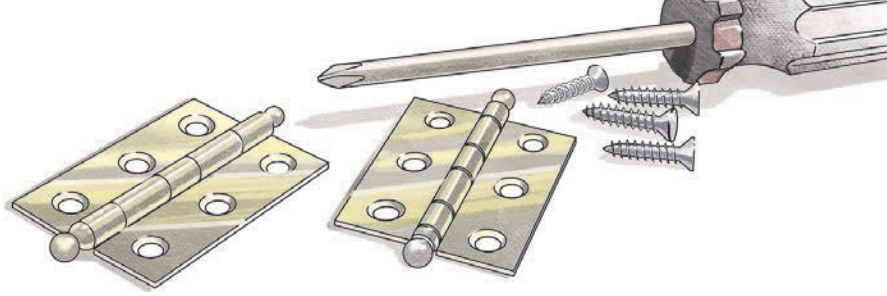

Most of the materials and supplies you'll need to build the projects are available at hardware stores or home centers. For specific products or hard-to-find items, take a look at the sources listed here. You'll find each part number listed by the company name. See the right margin for contact information.

ANILINE DYES *(p.10)*

- **Rockler**
  TransTint Dyes . . . . . Varies

DOG HOLE ACCESSORIES *(p.14)*

- **Lee Valley**
  Small Kreg Clamp 25K59.12
  Large Kreg Clamp 25K59.13
  10" Plate and Post 50F02.13
  5" Plate and Post 50F02.12
  Bench Blade 05G22.10
  9¾" Planing Stop 05G23.01
  17½" Planing Stop . . . 05G23.05
- **Rockler**
  Bench Cookie Plus Kit . . . 56071

KNIFE BLOCK *(p.18)*

- **MLCS**
  Bird's Mouth Bit 7839
- **Rockler**
  Dye "reddish brown" 27582
  3" Lazy Susan Bearing . . 28951

ROUTER BASES *(p.24)*

- **Rockler**
  Tall Jig Handles 52360

DISPLAY SHELF *(p.30)*

- **Rockler**
  ¼" -20 Thrd. Inserts 33183
  ¼" -20 Conn. Bolts 46707
  Blind Shelf Supports 59434

To drill the holes for the wall pins I used a 5/16" bit. For the shelf, I used a 9/16" bit. Long versions of both of these bits can be found at home centers or online.

The corner blocks are stained with a mixture of three parts *Zar* cherry stain and one part *Wood Kote Jel'd* stain (cherry). Then, all the parts are sprayed with two coats of lacquer.

CLAMPING STATION *(p.36)*

- **Woodcraft**
  T-Track KMS7509
  ⅜"-16 Thrd. Inserts 159284
- **McMaster-Carr**
  ⅜" Nylon Spacers . . 94639A860
  ⅜" Studded Knobs 6091K54
- **Rockler**
  5" Lock Swivel Casters . . . 37138
- **MicroJig**
  MATCHFIT Dovetail Clamps

The base assembly and grid side of the top are sprayed with a couple coats of clear lacquer.

BARN DOOR CABINET *(p.44)*

- **Rockler**
  ⅛" rad. Beadboard Bit . . . 33593
- **McMaster-Carr**
  1¼" O.D. Pulley 3434T23

The two-tone finish on the barn-door cabinet is achieved through a multi-step process. The finishes used are *General Finishes Milk Paint* in "antique white" and *General Finishes Milk Paint* in "lamp black" for the glazing effect. I also used *General Finishes Seal-a-Cell* in "clear." The online video found at *Woodsmith.com* shows how to apply the finish.

BAND SAW *(p.56)*

- **Rockler**
  Olson Cool Blocks 29699
  Carter Bearing Guides . . . 39360
  Urethane Tires . . . . . varies
  Kreg Band Saw Fence . . . 26186
- **Woodcraft**
  Carter Magfence II 153477
  Laguna DriftMaster 848582
- **Infinity Cutting Tools**
  Magswitch Fence . . . . . .varies

The Complete *Woodsmith* Magazine Collection *1979 to 2017*

- ✓ **Access Every Issue, Article, Photo, and Illustration Ever Published!**
- ✓ **Every Plan, Tip, and Technique, Everything You'll Ever Need!**
- ✓ **Instant Online Access on Your Computer, Laptop, Tablet, or Smartphone!**

Item #WL07U

Woodsmith, The Complete Magazine Collection on USB Flash Drive...$99

MAIL ORDER SOURCES

Project supplies may be ordered from the following companies:

General Finishes
800-783-6050
generalfinishes.com

Infinity Cutting Tools
877-872-2487
infinitytools.com

Kreg Tool
800-447-8638
kregtool.com

Lee Valley
800-871-8158
leevalley.com

McMaster-Carr
630-833-0300
mcmaster.com

MicroJig
855-747-7233
microjig.com

MLCS
800-533-9298
mlcswoodworking.com

Rockler
800-279-4441
rockler.com

Woodcraft
800-225-1153
woodcraft.com

Follow us on

looking inside
Final Details

▲ *Clamping Station.* With a reversible top and multiple clamping options, this mobile station has your workholding needs covered. Complete plans start on page 36.

Knife Block. Your kitchen knives ► will always be at the ready with this rotating knife storage block. Read more on how it's made beginning on page 18.

◄ *Barn-Door Cabinet.* The focal point of this rustic cabinet is a pair of sliding barn doors. We'll walk you through each step of the construction, from building the cabinet to making the hardware for the doors. Turn to page 44 to get started.

Floating Shelves. A modular design allows you to customize ► the configuration of these floating shelves to suit the wall space that you have available. Plans begin on page 30.